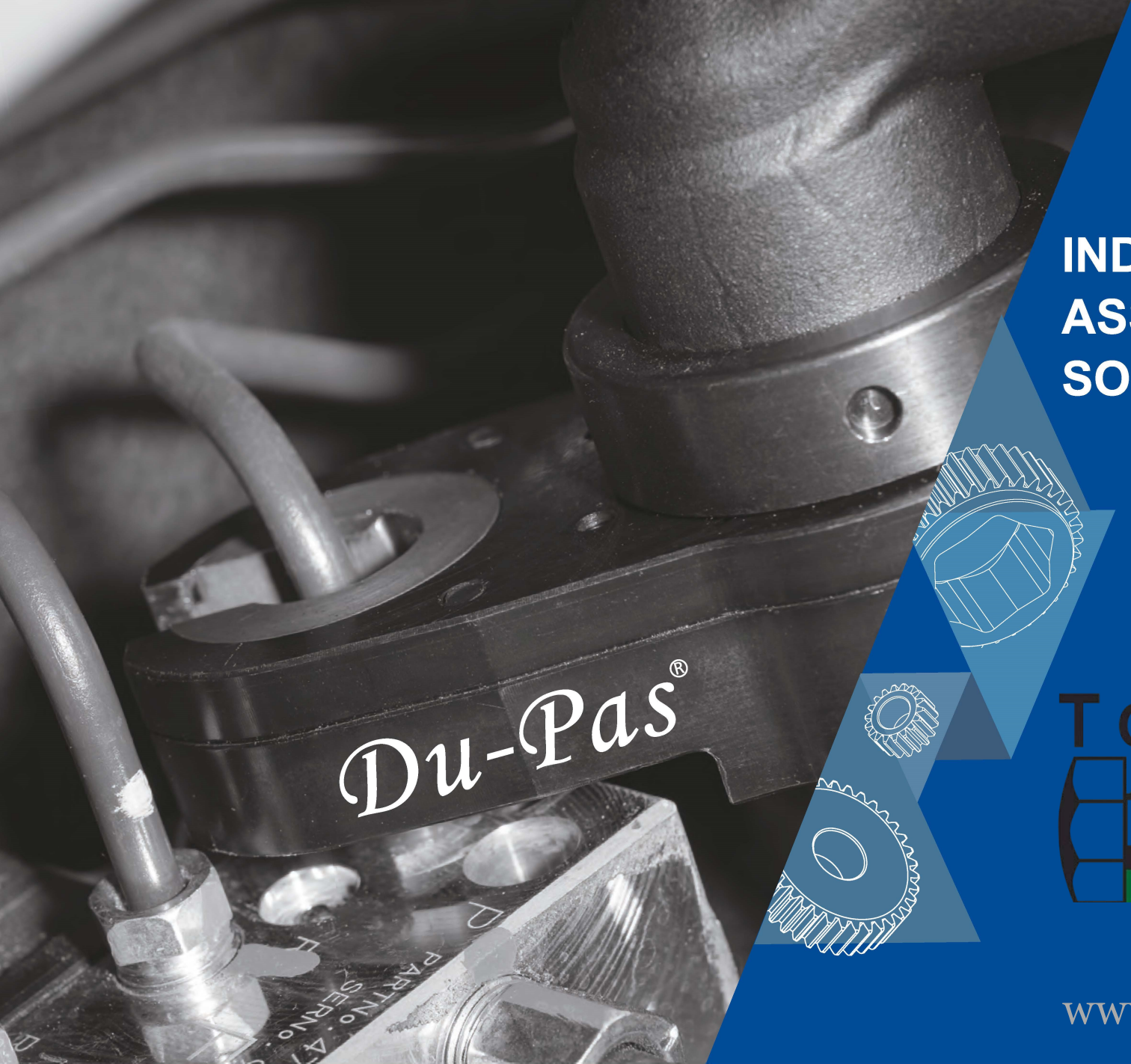

INDUSTRIAL ASSEMBLY SOLUTIONS

TORQTEC™

www.torqtec.net

TÜV NORD

CERTIFICATE

Management system as per
ISO 9001: 2015

TRANMAX MACHINERY CO., LTD.
No. 138, Renhuagong 1st Road, Dali District,
Taichung City, Taiwan, R.O.C.

Design and Manufacturing of Pneumatic, Cordless, and Electric Tools

ISO 9001:2015 Certificate

About Tranmax

Since established in 1985, Tranmax Machinery Co., Ltd has devoted itself to manufacturing and exporting high quality pneumatic tools and cordless tools for automotive repair applications and assembly solutions. Over 35 years of rich experience in developing impact wrenches, ratchet wrenches, screwdrivers, drills, grinders and various of torque control tools and attachments, such as geared offset heads, has successfully earned popularity and a sound reputation in world-wide markets, especially in Germany, the Netherlands, France, England and the United States. New innovations and improvements are persistently made to meet market trends and demands. Reliable products and customer satisfaction are what we always pursue. We welcome you to develop a mutually profitable relationship with us on a long-term basis.

Our Future

Strong R&D team

Continuously provides innovative solutions to meet demands of customers worldwide.

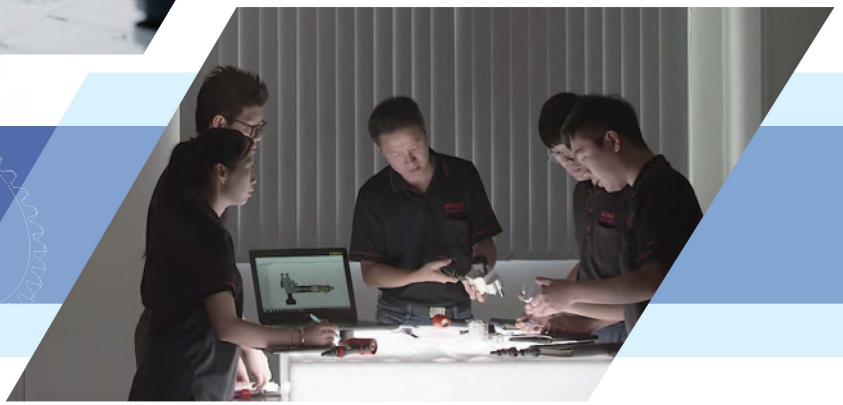

Our Equipment

Precision and complete machining equipment offers the best performance and quick delivery.

Our Equipment

Hobbing Machine

Gives the high efficiency of production.

Precise Wire EDM

Provides quick and precise solutions.

Organized Life Testing Process

Guarantees the quality of Du-Pas tools and also helps engineers to analyze and predict the service life and maintenance of a product.

BASIC-LINE

Du-Pas®

BC - 90° close type

BO - 90° open type

IN-LINE

IC - 0° close type

IO - 0° open type

Tranmax Machinery Co., Ltd.

Du-Pas®

SPECIAL-LINE

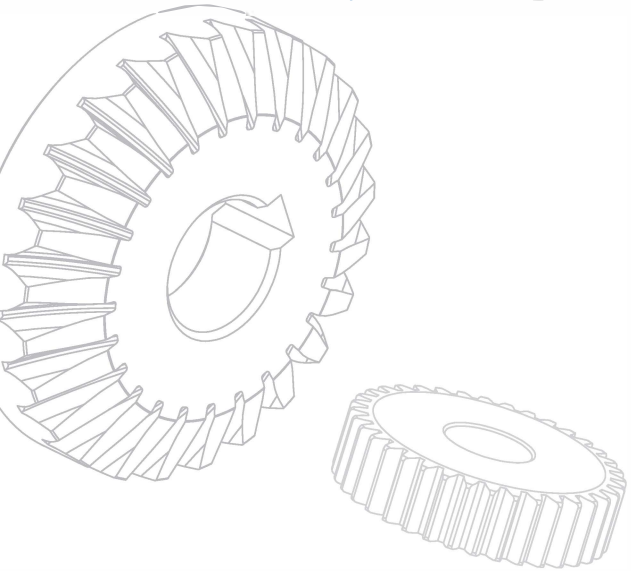

GAC - 26° close type

GBC - 90° close type

MULTI-LINE

HOLD & DRIVE

APPENDIX

Du-Pas Tools references

Tranmax Machinery Co., Ltd.

Output profile

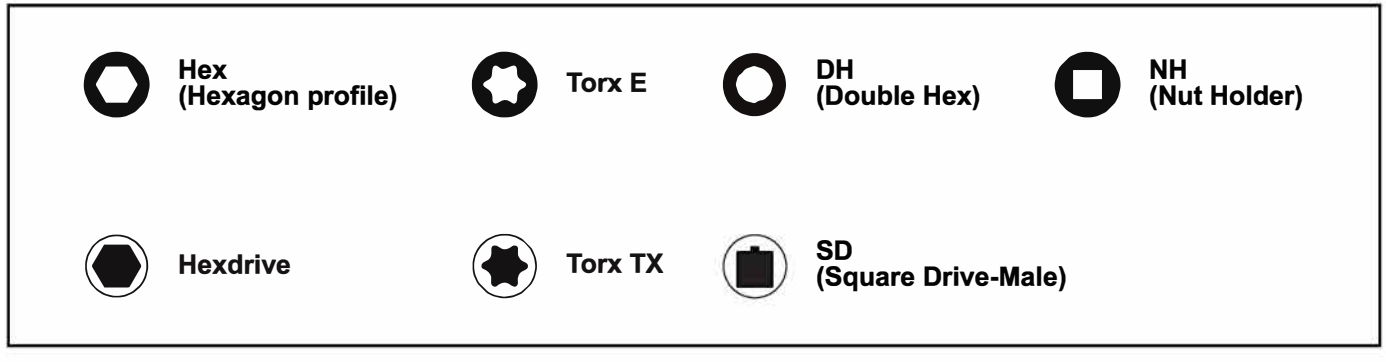

Direction of RIGHT rotation

Direction of LEFT rotation

BASIC-LINE

BC - 90° close type

BASIC-LINE BC-10-1

Technical Data	
Max. Output (Nm)	13
SW Max. (mm)	13
Radius (mm)	13
Height (mm)	10

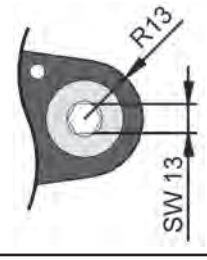

Gear Socket type & Dimension		
(HEX)	≦ 1/2 inch	≦ 13 mm

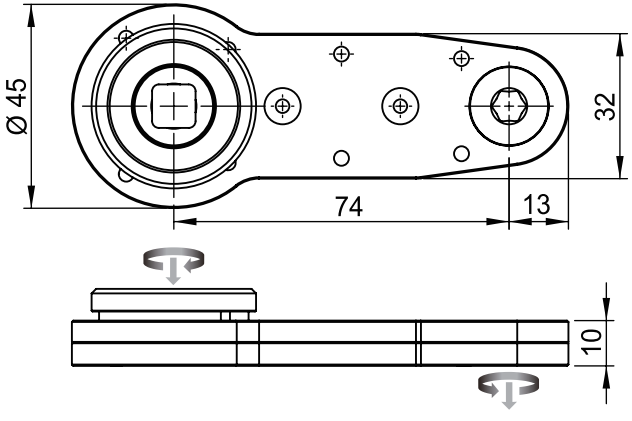

	BC-10-1-1
Maximum Input (Nm)	15
Max. Output (Nm)	13
Efficiency Factor (η)	0.73
Gear Stages	3
Gear Ratio (i)	1.22

Du-Pas®

BASIC-LINE BC-10-2

Technical Data	
Max. Output (Nm)	8
SW Max. (mm)	11
Radius (mm)	11.5
Height (mm)	10

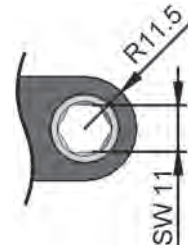

Gear Socket type & Dimension		
(HEX)	≦ 27/64 inch	≦ 11 mm

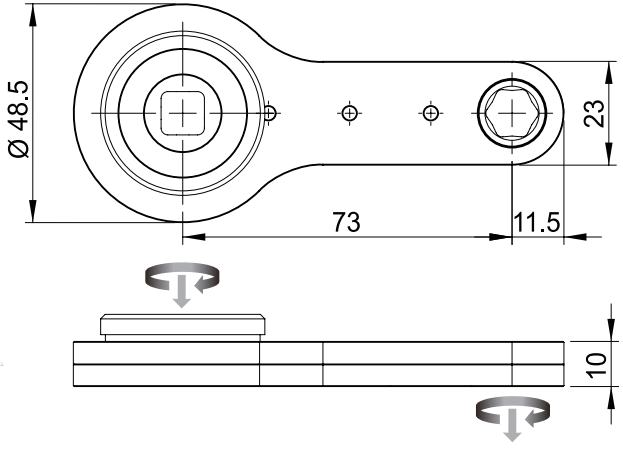

	BC-10-2-1
Maximum Input (Nm)	15
Max. Output (Nm)	8
Efficiency Factor (η)	0.66
Gear Stages	4
Gear Ratio (i)	0.9

BASIC-LINE BC-12-1

Technical Data	
Max. Output (Nm)	7
SW Max. (mm)	8
Radius (mm)	8.6
Height (mm)	12

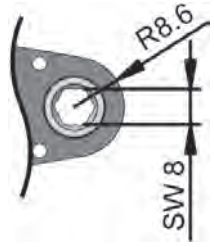

Gear Socket type & Dimension		
(HEX)	≦ 5/16 inch	≦ 8 mm

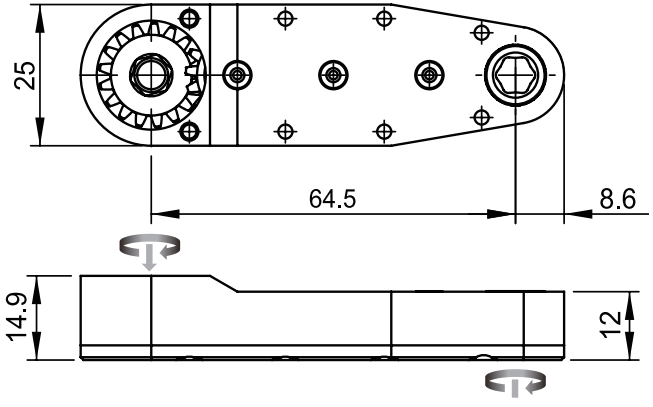

	BC-12-1-1
Maximum Input (Nm)	15
Max. Output (Nm)	7
Efficiency Factor (η)	0.66
Gear Stages	4
Gear Ratio (i)	0.76

Du-Pas®

BASIC-LINE BC-14-1

Technical Data	
Max. Output (Nm)	7
SW Max. (mm)	10
Radius (mm)	10
Height (mm)	14

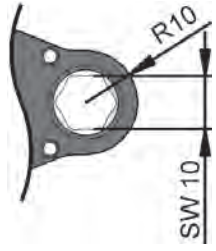

Gear Socket type & Dimension		
(HEX)	≦ 25/64 inch	≦ 10 mm

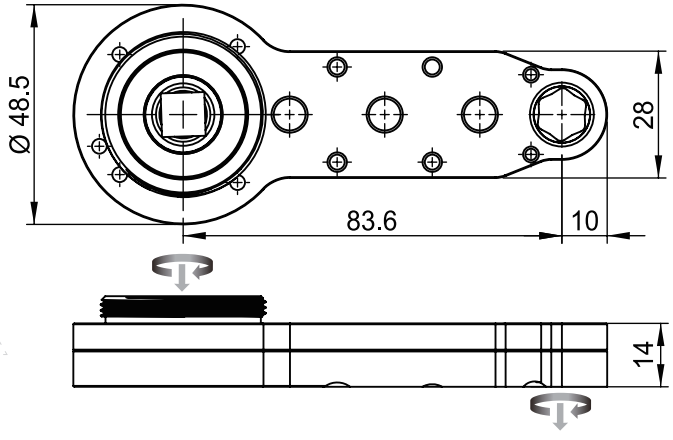

	BC-14-1-1
Maximum Input (Nm)	20
Max. Output (Nm)	7
Efficiency Factor (η)	0.66
Gear Stages	4
Gear Ratio (i)	0.58

BASIC-LINE BC-15-1

Technical Data	
Max. Output (Nm)	33
SW Max. (mm)	15
Radius (mm)	15
Height (mm)	15

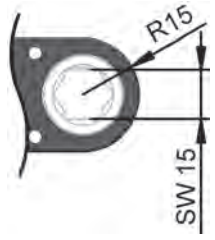

Gear Socket type & Dimension		
(HEX)	≦ 37/64 inch	≦ 15 mm

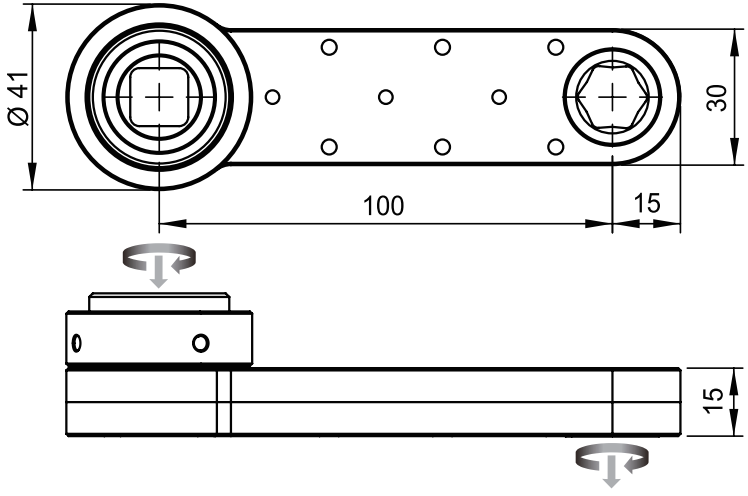

	BC-15-1-1
Maximum Input (Nm)	50
Max. Output (Nm)	33
Efficiency Factor (η)	0.66
Gear Stages	4
Gear Ratio (i)	1

Du-Pas®

BASIC-LINE BC-16-1

Technical Data	
Max. Output (Nm)	16
SW Max. (mm)	12
Radius (mm)	12.5
Height (mm)	16

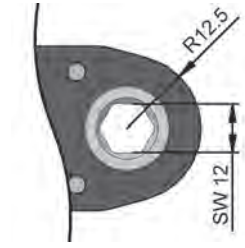

Gear Socket type & Dimension		
(HEX)	≦ 15/32 inch	≦ 12 mm

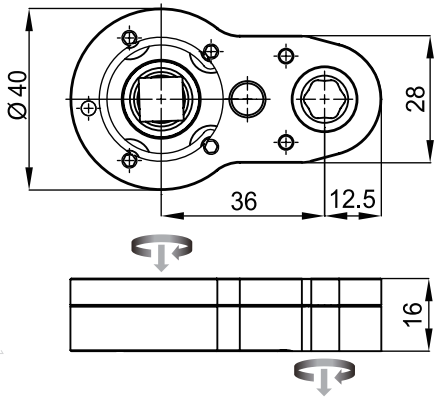

	BC-16-1-1
Maximum Input (Nm)	20
Max. Output (Nm)	16
Efficiency Factor (η)	0.81
Gear Stages	2
Gear Ratio (i)	1

BASIC-LINE BC-16-2

Technical Data	
Max. Output (Nm)	13
SW Max. (mm)	11
Radius (mm)	11
Height (mm)	16

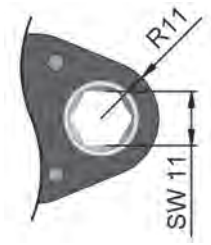

Gear Socket type & Dimension		
(HEX)	≦ 27/64 inch	≦ 11 mm

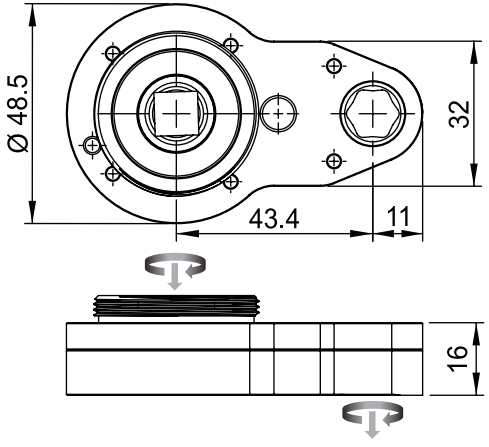

	BC-16-2-1
Maximum Input (Nm)	20
Max. Output (Nm)	13
Efficiency Factor (η)	0.81
Gear Stages	2
Gear Ratio (i)	0.82

Du-Pas®

BASIC-LINE BC-16-3

Technical Data	
Max. Output (Nm)	29
SW Max. (mm)	13
Radius (mm)	13
Height (mm)	16

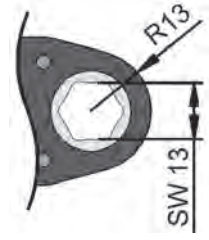

Gear Socket type & Dimension		
(HEX)	≦ 1/2 inch	≦ 13 mm
(Torx TX)	≦ T80	

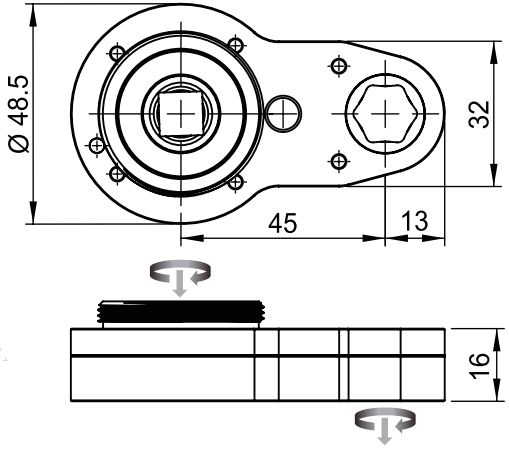

	BC-16-3-1
Maximum Input (Nm)	35
Max. Output (Nm)	28
Efficiency Factor (η)	0.81
Gear Stages	2
Gear Ratio (i)	1

BASIC-LINE BC-16-3

Technical Data	
Max. Output (Nm)	29
SW Max. (mm)	13
Radius (mm)	13
Height (mm)	16

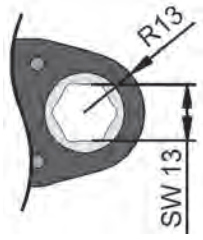

Gear Socket type & Dimension		
(HEX)	≦ 1/2 inch	≦ 13 mm
(Torx TX)	≦ T80	

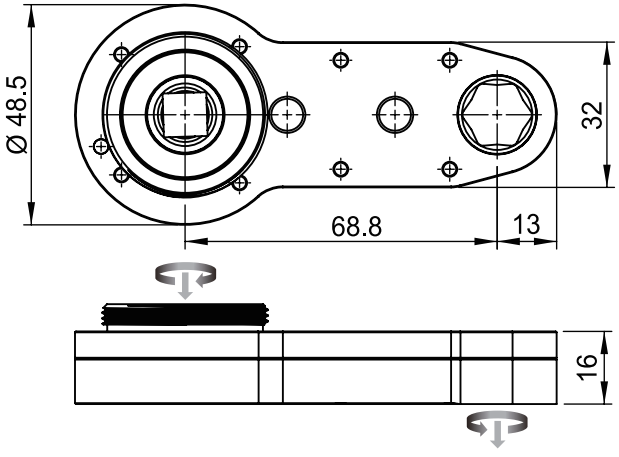

	BC-16-3-2
Maximum Input (Nm)	40
Max. Output (Nm)	29
Efficiency Factor (η)	0.73
Gear Stages	3
Gear Ratio (i)	1

Du-Pas®

BASIC-LINE BC-16-4

Technical Data	
Max. Output (Nm)	36
SW Max. (mm)	13
Radius (mm)	13
Height (mm)	16

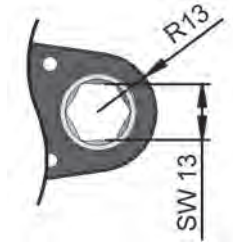

Gear Socket type & Dimension		
(HEX)	≦ 1/2 inch	≦ 13 mm

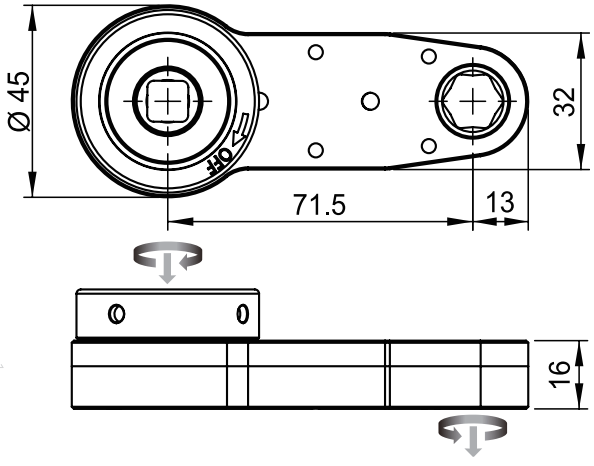

	BC-16-4-1
Maximum Input (Nm)	40
Max. Output (Nm)	36
Efficiency Factor (η)	0.73
Gear Stages	3
Gear Ratio (i)	1.29

BASIC-LINE BC-16-4

Technical Data	
Max. Output (Nm)	36
SW Max. (mm)	13
Radius (mm)	13
Height (mm)	16

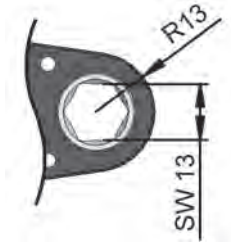

Gear Socket type & Dimension		
(HEX)	≦ 1/2 inch	≦ 13 mm

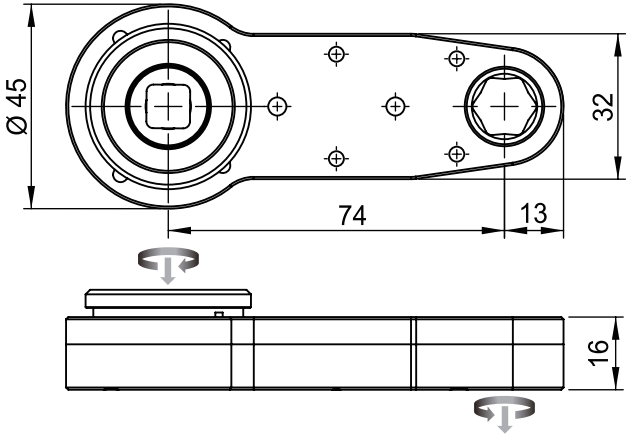

	BC-16-4-2
Maximum Input (Nm)	50
Max. Output (Nm)	36
Efficiency Factor (η)	0.73
Gear Stages	3
Gear Ratio (i)	1

Du-Pas®

BASIC-LINE BC-16-5

Technical Data	
Max. Output (Nm)	21
SW Max. (mm)	11
Radius (mm)	11
Height (mm)	16

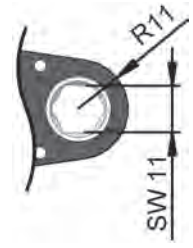

Gear Socket type & Dimension		
(HEX)	≦ 27/64 inch	≦ 11 mm
(HD)	≦ 27/64 inch	≦ 11 mm

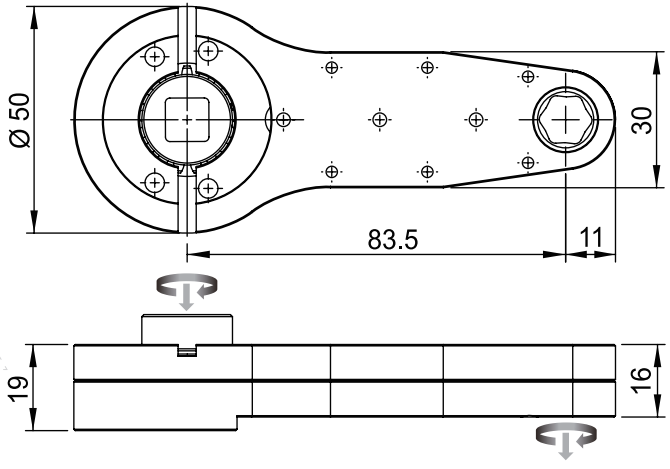

	BC-16-5-1
Maximum Input (Nm)	40
Max. Output (Nm)	21
Efficiency Factor (η)	0.66
Gear Stages	4
Gear Ratio (i)	0.82

BASIC-LINE BC-16-6

Technical Data	
Max. Output (Nm)	21
SW Max. (mm)	13
Radius (mm)	14
Height (mm)	16

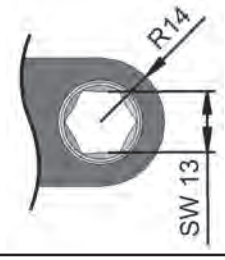

Gear Socket type & Dimension		
(HEX)	≦ 1/2 inch	≦ 13 mm

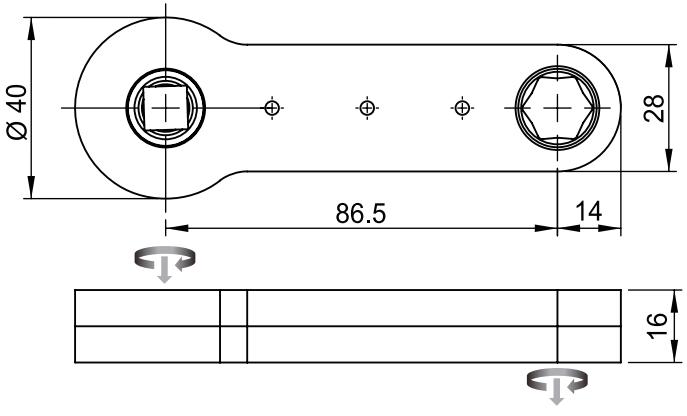

	BC-16-6-1
Maximum Input (Nm)	40
Max. Output (Nm)	21
Efficiency Factor (η)	0.66
Gear Stages	4
Gear Ratio (i)	0.81

Du-Pas®

BASIC-LINE BC-16-7

Technical Data	
Max. Output (Nm)	33
SW Max. (mm)	15
Radius (mm)	15
Height (mm)	16

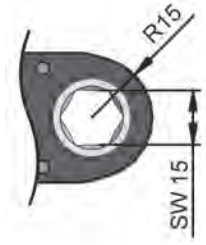

Gear Socket type & Dimension		
(HEX)	≦ 37/64 inch	≦ 15 mm

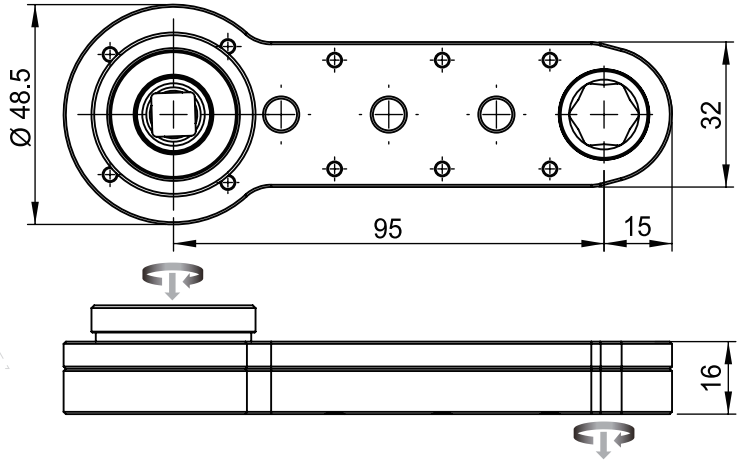

	BC-16-7-1
Maximum Input (Nm)	50
Max. Output (Nm)	33
Efficiency Factor (η)	0.66
Gear Stages	4
Gear Ratio (i)	1

BASIC-LINE BC-16-8

Technical Data	
Max. Output (Nm)	25
SW Max. (mm)	13
Radius (mm)	13.5
Height (mm)	16

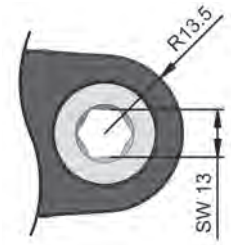

Gear Socket type & Dimension		
(HEX)	≦ 1/2 inch	≦ 13 mm
(Hexdrive)	≦ 1/2 inch	≦ 13 mm
(SD)	≦ 45/64 inch	

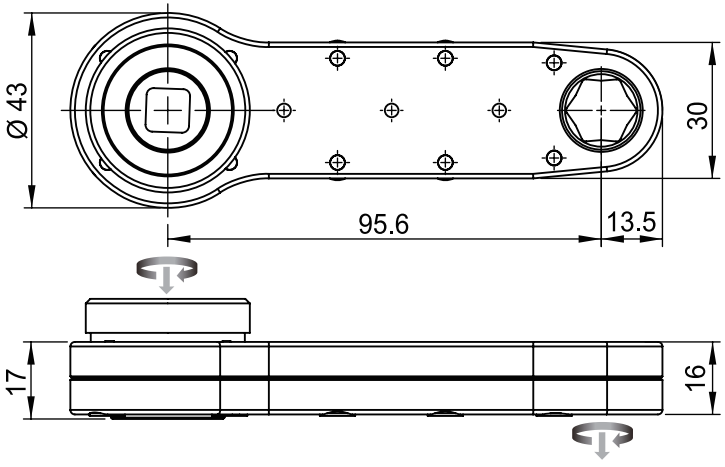

	BC-16-8-1
Maximum Input (Nm)	50
Max. Output (Nm)	25
Efficiency Factor (η)	0.66
Gear Stages	4
Gear Ratio (i)	0.77

Du-Pas®

BASIC-LINE BC-16-8

Technical Data	
Max. Output (Nm)	25
SW Max. (mm)	13
Radius (mm)	13.5
Height (mm)	16

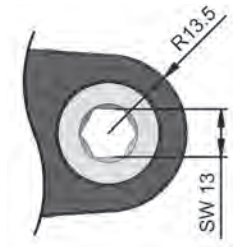

Gear Socket type & Dimension		
(HEX)	≦ 1/2 inch	≦ 13 mm
(Hexdrive)	≦ 1/2 inch	≦ 13 mm
(SD)	≦ 45/64 inch	

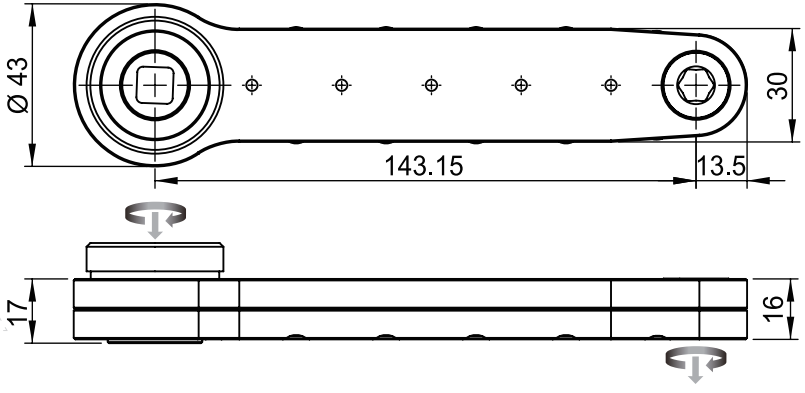

	BC-16-8-2
Maximum Input (Nm)	50
Max. Output (Nm)	20
Efficiency Factor (η)	0.53
Gear Stages	6
Gear Ratio (i)	0.77

BASIC-LINE BC-18-1

Technical Data	
Max. Output (Nm)	33
SW Max. (mm)	15
Radius (mm)	15
Height (mm)	18

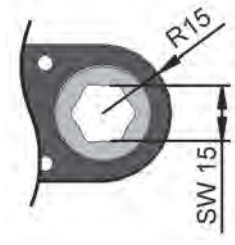

Gear Socket type & Dimension		
(HEX)	≦ 37/64 inch	≦ 15 mm

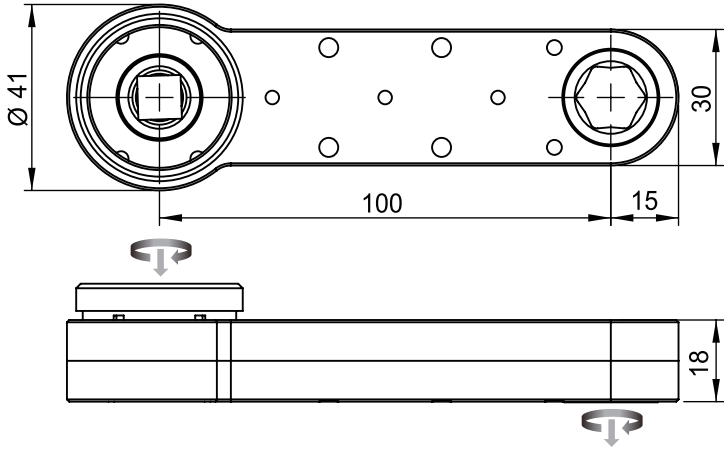

	BC-18-1-1
Maximum Input (Nm)	50
Max. Output (Nm)	33
Efficiency Factor (η)	0.66
Gear Stages	4
Gear Ratio (i)	1

Du-Pas®

BASIC-LINE BC-18-2

Technical Data	
Max. Output (Nm)	48
SW Max. (mm)	14
Radius (mm)	14.5
Height (mm)	18

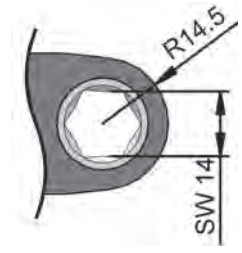

Gear Socket type & Dimension		
(HEX)	≦ 35/64 inch	≦ 14 mm

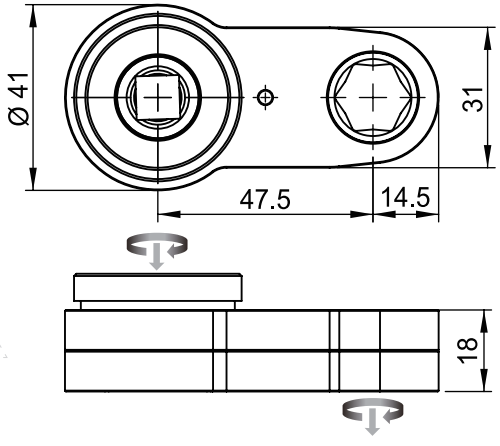

	BC-18-2-1
Maximum Input (Nm)	60
Max. Output (Nm)	48
Efficiency Factor (η)	0.81
Gear Stages	2
Gear Ratio (i)	1

BASIC-LINE BC-20-1

Technical Data	
Max. Output (Nm)	41
SW Max. (mm)	10
Radius (mm)	10.25
Height (mm)	20

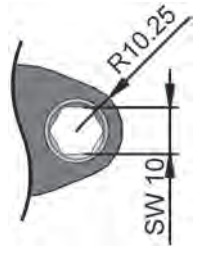

Gear Socket type & Dimension		
(HEX)	≦ 25/64 inch	≦ 10 mm
(Torx TX)	≦ T60	

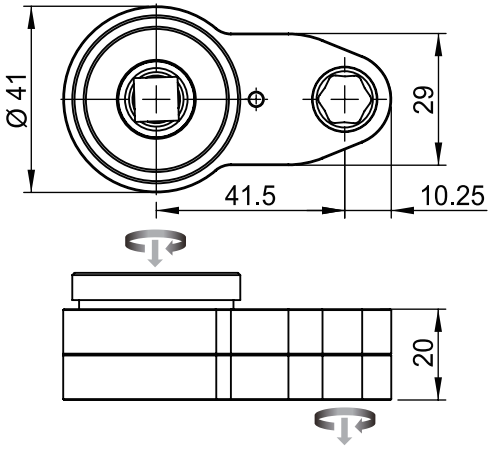

	BC-20-1-1
Maximum Input (Nm)	60
Max. Output (Nm)	41
Efficiency Factor (η)	0.81
Gear Stages	2
Gear Ratio (i)	0.86

Du-Pas®

BASIC-LINE BC-20-2

Technical Data	
Max. Output (Nm)	56
SW Max. (mm)	18
Radius (mm)	18
Height (mm)	20

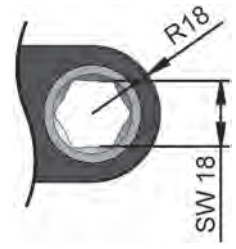

Gear Socket type & Dimension		
(HEX)	≦ 45/64 inch	≦ 18 mm

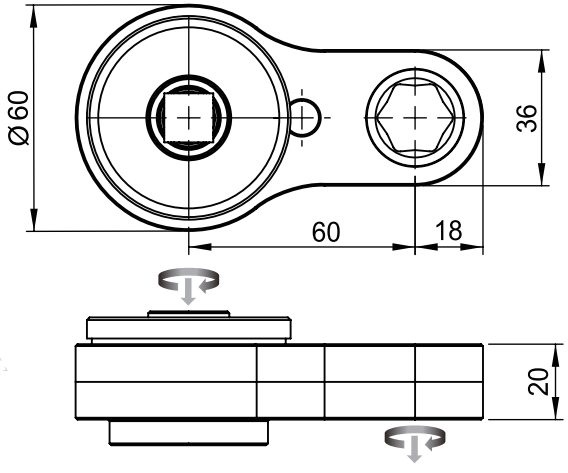

	BC-20-2-1
Maximum Input (Nm)	70
Max. Output (Nm)	56
Efficiency Factor (η)	0.81
Gear Stages	2
Gear Ratio (i)	1

BASIC-LINE BC-20-3

Technical Data	
Max. Output (Nm)	56
SW Max. (mm)	19
Radius (mm)	19.5
Height (mm)	20

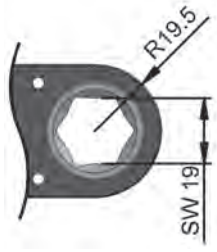

Gear Socket type & Dimension		
(HEX)	≦ 47/64 inch	≦ 19 mm

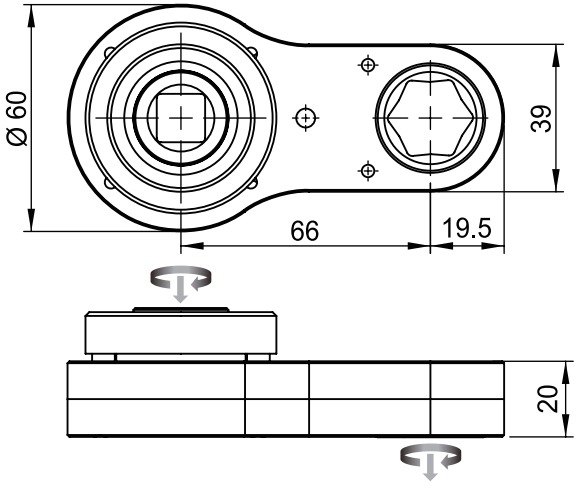

	BC-20-3-1
Maximum Input (Nm)	70
Max. Output (Nm)	56
Efficiency Factor (η)	0.81
Gear Stages	2
Gear Ratio (i)	1

Du-Pas®

BASIC-LINE BC-20-4

Technical Data	
Max. Output (Nm)	46
SW Max. (mm)	17
Radius (mm)	17
Height (mm)	20

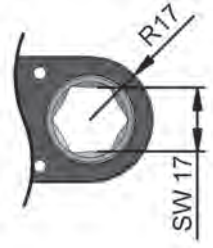

Gear Socket type & Dimension		
(HEX)	≦ 21/32 inch	≦ 17 mm

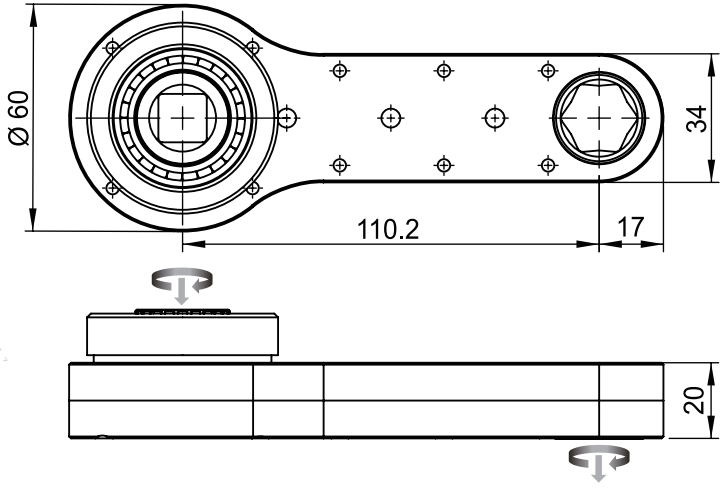

	BC-20-4-1
Maximum Input (Nm)	70
Max. Output (Nm)	46
Efficiency Factor (η)	0.66
Gear Stages	4
Gear Ratio (i)	1

BASIC-LINE BC-22-1

Technical Data	
Max. Output (Nm)	65
SW Max. (mm)	18
Radius (mm)	18
Height (mm)	22

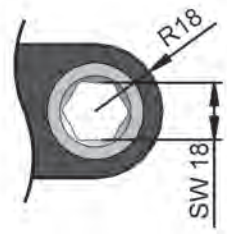

Gear Socket type & Dimension		
(HEX)	≦ 45/64 inch	≦ 18 mm
(SD)	≦ 31/32 inch	

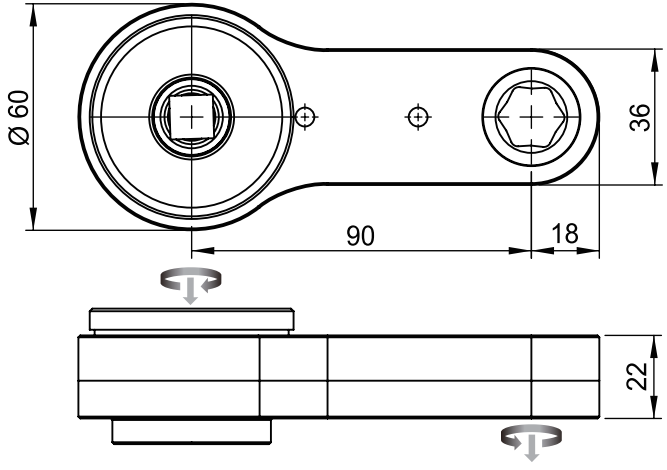

	BC-22-1-1
Maximum Input (Nm)	90
Max. Output (Nm)	65
Efficiency Factor (η)	0.73
Gear Stages	3
Gear Ratio (i)	1

Du-Pas®

BASIC-LINE BC-24-1

Technical Data	
Max. Output (Nm)	66
SW Max. (mm)	16
Radius (mm)	16
Height (mm)	24

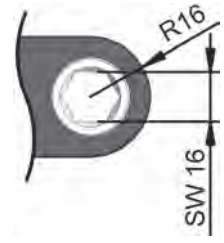

Gear Socket type & Dimension		
(HEX)	≦ 5/8 inch	≦ 16 mm
(SD)	≦ 55/64 inch	

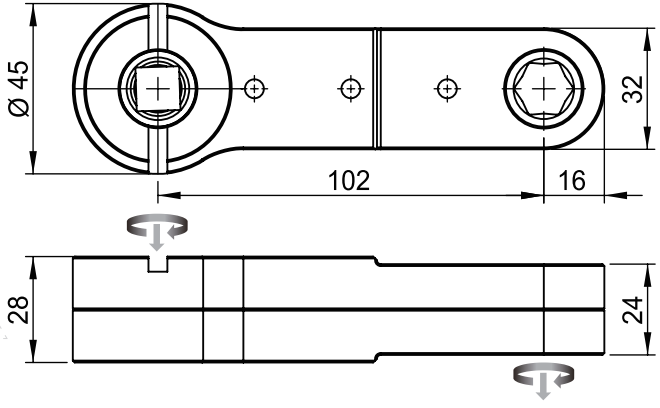

	BC-24-1-1
Maximum Input (Nm)	100
Max. Output (Nm)	66
Efficiency Factor (η)	0.66
Gear Stages	4
Gear Ratio (i)	1

BASIC-LINE BC-30-1

Technical Data	
Max. Output (Nm)	79
SW Max. (mm)	16
Radius (mm)	16
Height (mm)	30

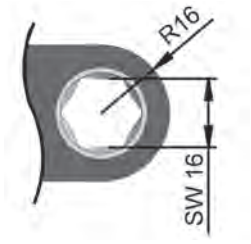

Gear Socket type & Dimension		
(HEX)	≦ 5/8 inch	≦ 16 mm

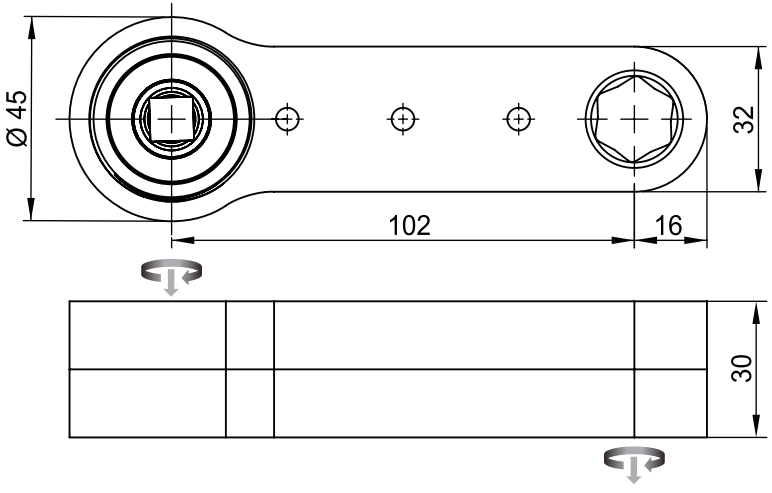

	BC-30-1-1
Maximum Input (Nm)	120
Max. Output (Nm)	79
Efficiency Factor (η)	0.66
Gear Stages	4
Gear Ratio (i)	1

Du-Pas®

BASIC-LINE BC-34-1

Technical Data	
Max. Output (Nm)	165
SW Max. (mm)	33
Radius (mm)	33
Height (mm)	34

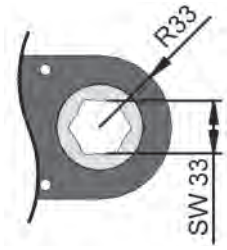

Gear Socket type & Dimension		
(HEX)	≦ 1-1/4 inch	≦ 33 mm

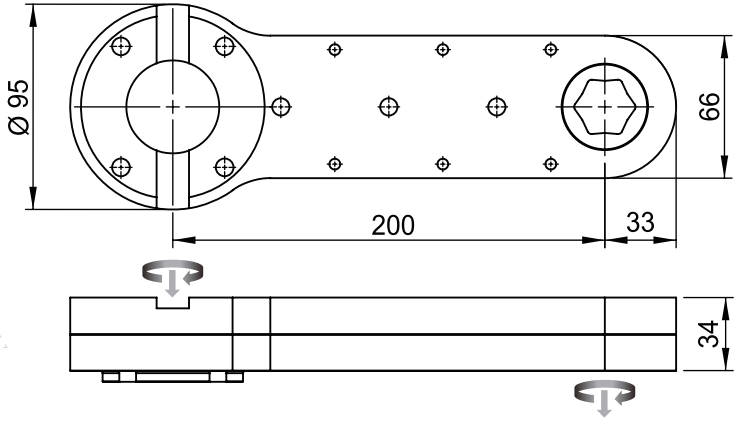

	BC-34-1-1
Maximum Input (Nm)	250
Max. Output (Nm)	165
Efficiency Factor (η)	0.66
Gear Stages	4
Gear Ratio (i)	1

BASIC-LINE BC-35-1

Technical Data	
Max. Output (Nm)	71
SW Max. (mm)	17
Radius (mm)	17
Height (mm)	35

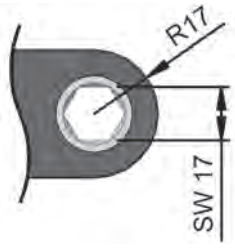

Gear Socket type & Dimension		
(HEX)	≦ 21/32 inch	≦ 17 mm

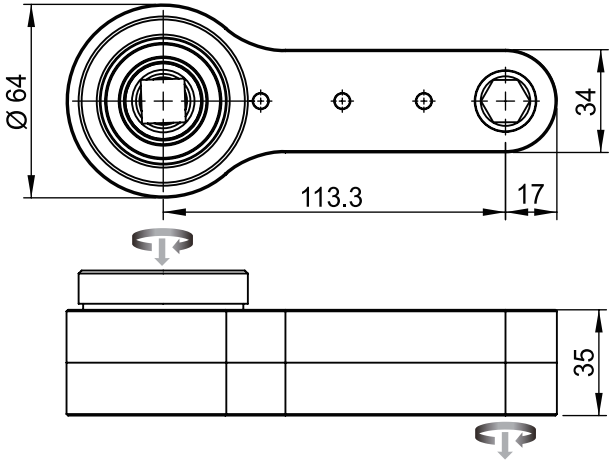

	BC-35-1-1
Maximum Input (Nm)	150
Max. Output (Nm)	71
Efficiency Factor (η)	0.66
Gear Stages	4
Gear Ratio (i)	0.72

BASIC-LINE

BO - 90° open type

BASIC-LINE BO-10-1

Technical Data	
Max. Output (Nm)	16
SW Max. (mm)	21
Radius (mm)	21
Height (mm)	10

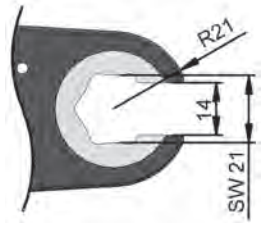

Gear Socket type & Dimension		
(HEX)	≦ 13/16 inch	≦ 21 mm

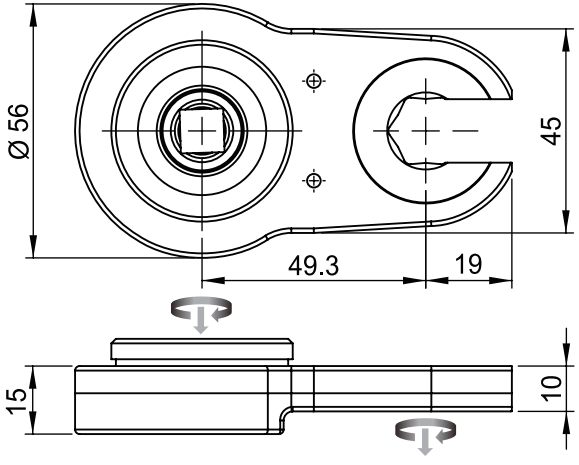

	BO-10-1-1
Maximum Input (Nm)	20
Max. Output (Nm)	16
Efficiency Factor (η)	0.81
Gear Stages	2
Gear Ratio (i)	1

Du-Pas®

BASIC-LINE BO-12-1

Technical Data	
Max. Output (Nm)	16
SW Max. (mm)	12
Radius (mm)	12
Height (mm)	12

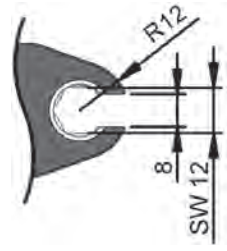

Gear Socket type & Dimension		
(HEX)	≦ 15/32 inch	≦ 12 mm

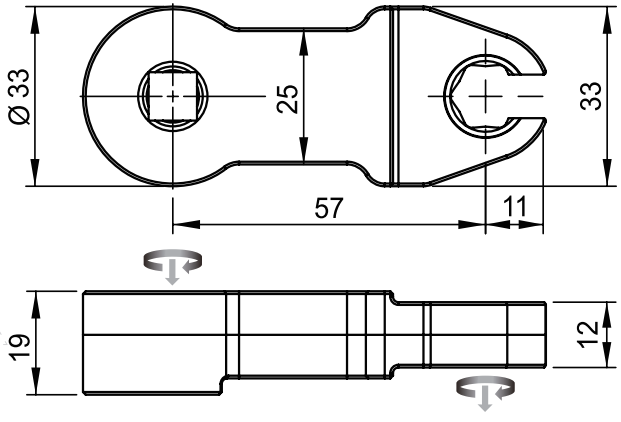

	BO-12-1-1
Maximum Input (Nm)	25
Max. Output (Nm)	16
Efficiency Factor (η)	0.65
Gear Stages	4
Gear Ratio (i)	1

BASIC-LINE BO-14-1

Technical Data	
Max. Output (Nm)	19
SW Max. (mm)	15
Radius (mm)	15
Height (mm)	14

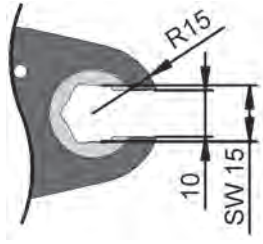

Gear Socket type & Dimension		
(HEX)	≦ 37/64 inch	≦ 15 mm

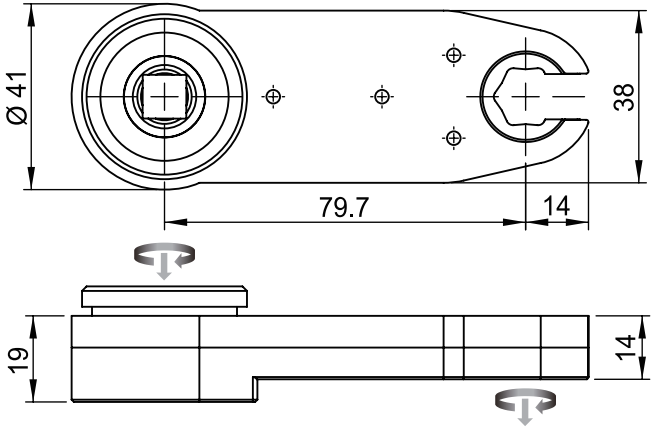

	BO-14-1-1
Maximum Input (Nm)	30
Max. Output (Nm)	19
Efficiency Factor (η)	0.66
Gear Stages	4
Gear Ratio (i)	1

Du-Pas®

BASIC-LINE BO-16-1

Technical Data	
Max. Output (Nm)	28
SW Max. (mm)	15
Radius (mm)	15.5
Height (mm)	16

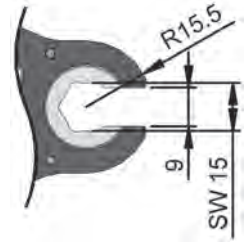

Gear Socket type & Dimension		
(HEX)	≦ 37/64 inch	≦ 15 mm
(HD)	≦ 37/64 inch	≦ 15 mm

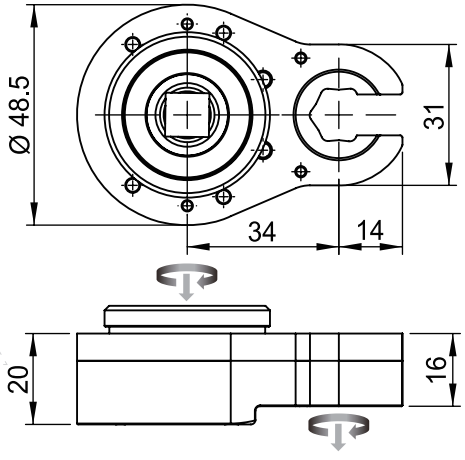

	BO-16-1-1
Maximum Input (Nm)	35
Max. Output (Nm)	28
Efficiency Factor (η)	0.81
Gear Stages	2
Gear Ratio (i)	1

BASIC-LINE BO-16-2

Technical Data	
Max. Output (Nm)	28
SW Max. (mm)	15
Radius (mm)	15.5
Height (mm)	16

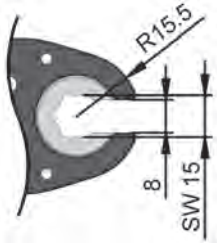

Gear Socket type & Dimension		
(HEX)	≦ 37/64 inch	≦ 15 mm
(HD)	≦ 37/64 inch	≦ 15 mm

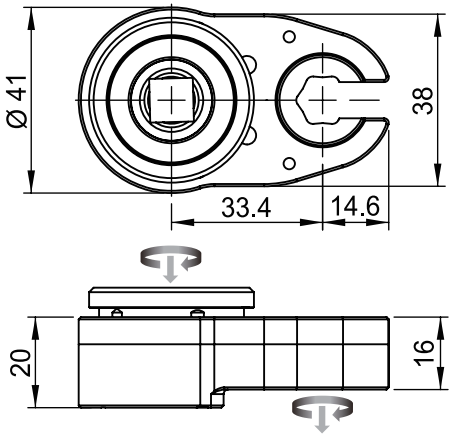

	BO-16-2-1
Maximum Input (Nm)	35
Max. Output (Nm)	28
Efficiency Factor (η)	0.81
Gear Stages	2
Gear Ratio (i)	1

Du-Pas®

BASIC-LINE BO-16-3

Technical Data	
Max. Output (Nm)	28
SW Max. (mm)	22
Radius (mm)	21.5
Height (mm)	16

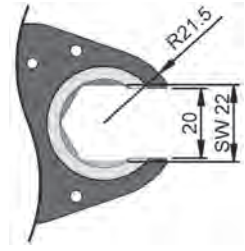

Gear Socket type & Dimension		
(HEX)	≦ 55/64 inch	≦ 22 mm

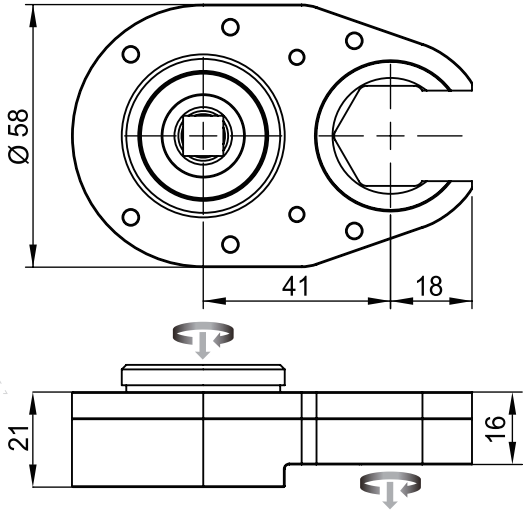

	BO-16-3-1
Maximum Input (Nm)	35
Max. Output (Nm)	28
Efficiency Factor (η)	0.81
Gear Stages	2
Gear Ratio (i)	1

BASIC-LINE BO-16-4

Technical Data	
Max. Output (Nm)	28
SW Max. (mm)	10
Radius (mm)	19.3
Height (mm)	16

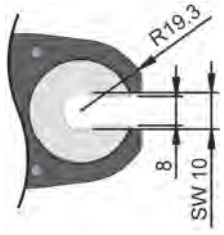

Gear Socket type & Dimension		
(HEX)	≦ 25/64 inch	≦ 10 mm

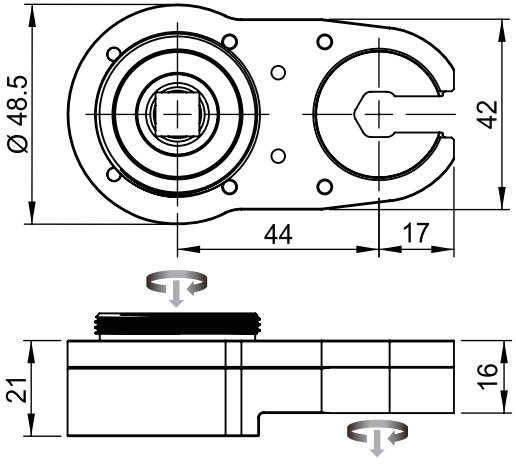

	BO-16-4-1
Maximum Input (Nm)	35
Max. Output (Nm)	28
Efficiency Factor (η)	0.81
Gear Stages	2
Gear Ratio (i)	1

Du-Pas®

BASIC-LINE BO-16-5

Technical Data	
Max. Output (Nm)	28
SW Max. (mm)	19
Radius (mm)	19.3
Height (mm)	16

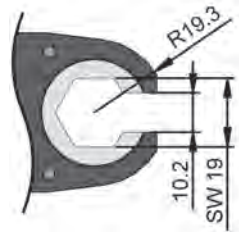

Gear Socket type & Dimension		
⬡	(HEX)	=7/16~47/64 inch =11~19 mm
⬡	(HD)	=7/16~47/64 inch =11~19 mm

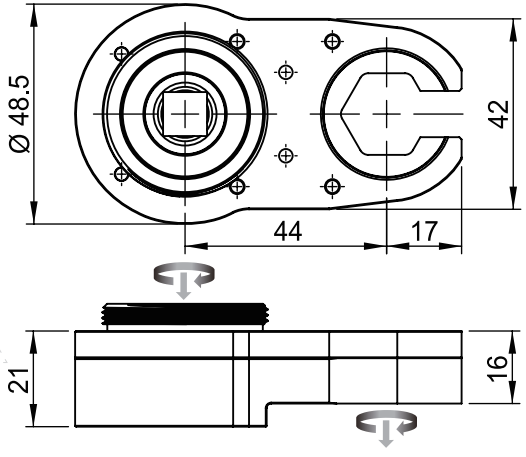

	BO-16-5-1
Maximum Input (Nm)	35
Max. Output (Nm)	28
Efficiency Factor (η)	0.81
Gear Stages	2
Gear Ratio (i)	1

BASIC-LINE BO-16-6

Technical Data	
Max. Output (Nm)	28
SW Max. (mm)	24
Radius (mm)	24
Height (mm)	16

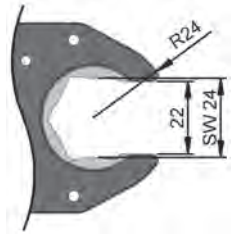

Gear Socket type & Dimension		
(HEX)	≦ 15/16 inch	≦ 24 mm

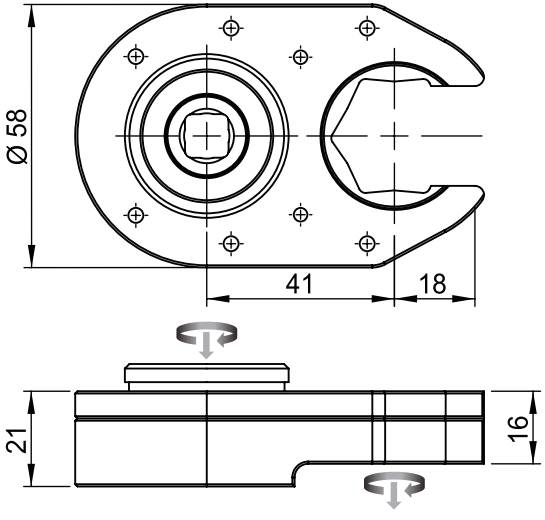

	BO-16-6-1
Maximum Input (Nm)	35
Max. Output (Nm)	28
Efficiency Factor (η)	0.81
Gear Stages	2
Gear Ratio (i)	1

Du-Pas®

BASIC-LINE BO-16-7

Technical Data	
Max. Output (Nm)	28
SW Max. (mm)	24
Radius (mm)	24
Height (mm)	16

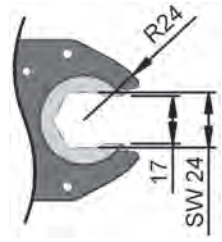

Gear Socket type & Dimension		
(HEX)	≦ 15/16 inch	≦ 24 mm
(HD)	≦ 15/16 inch	≦ 24 mm

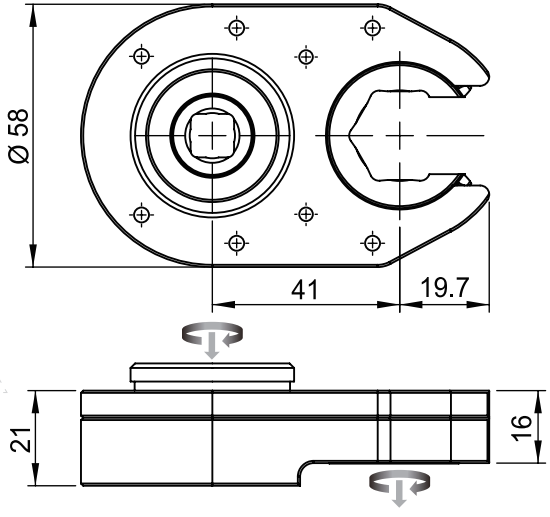

	BO-16-7-1
Maximum Input (Nm)	35
Max. Output (Nm)	28
Efficiency Factor (η)	0.81
Gear Stages	2
Gear Ratio (i)	1

BASIC-LINE BO-16-8

Technical Data	
Max. Output (Nm)	23
SW Max. (mm)	13
Radius (mm)	13
Height (mm)	16

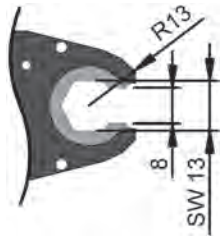

Gear Socket type & Dimension		
(HEX)	≦ 1/2 inch	≦ 13 mm
(HD)	≦ 1/2 inch	≦ 13 mm

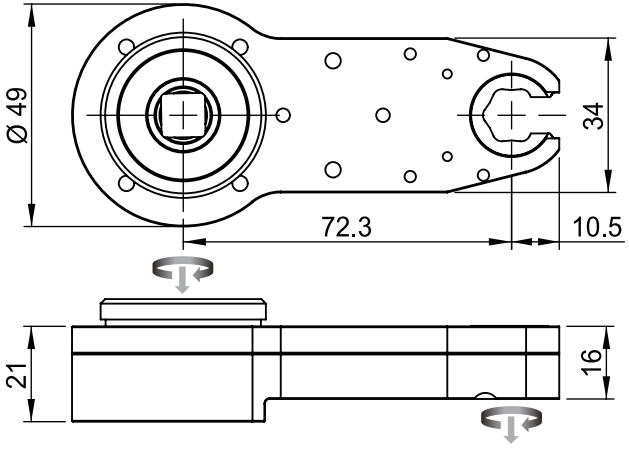

	BO-16-8-1
Maximum Input (Nm)	35
Max. Output (Nm)	23
Efficiency Factor (η)	0.66
Gear Stages	4
Gear Ratio (i)	1

Du-Pas®

BASIC-LINE BO-16-9

Technical Data	
Max. Output (Nm)	23
SW Max. (mm)	13
Radius (mm)	13.5
Height (mm)	16

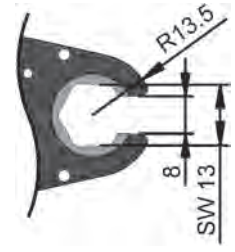

Gear Socket type & Dimension		
(HEX)	≦ 1/2 inch	≦ 13 mm
(HD)	≦ 1/2 inch	≦ 13 mm

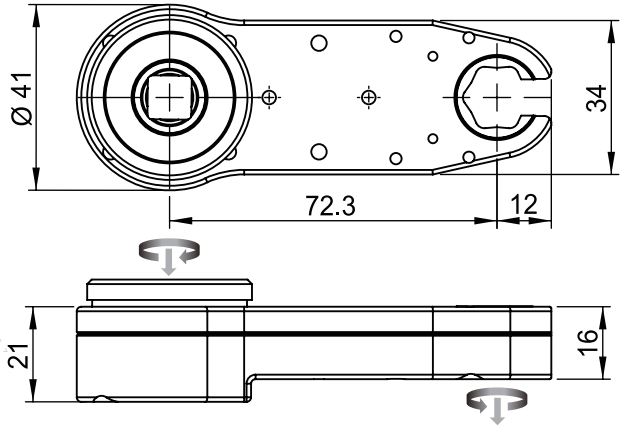

	BO-16-9-1
Maximum Input (Nm)	35
Max. Output (Nm)	23
Efficiency Factor (η)	0.66
Gear Stages	4
Gear Ratio (i)	1

BASIC-LINE BO-16-10

Technical Data	
Max. Output (Nm)	23
SW Max. (mm)	16
Radius (mm)	16
Height (mm)	16

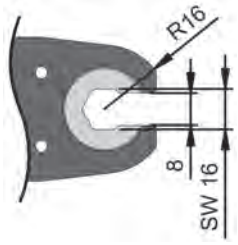

Gear Socket type & Dimension		
(HEX)	≦ 5/8 inch	≦ 16 mm
(HD)	≦ 5/8 inch	≦ 16 mm

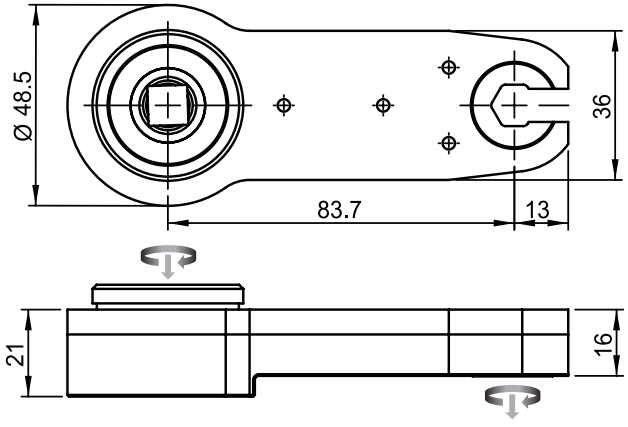

	BO-16-10-1
Maximum Input (Nm)	35
Max. Output (Nm)	23
Efficiency Factor (η)	0.66
Gear Stages	4
Gear Ratio (i)	1

Du-Pas®

BASIC-LINE BO-16-11

Technical Data	
Max. Output (Nm)	23
SW Max. (mm)	19
Radius (mm)	19.3
Height (mm)	16

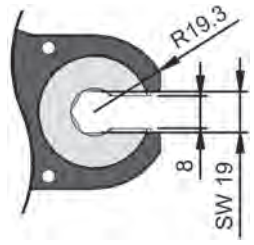

Gear Socket type & Dimension		
(HEX)	≦ 47/64 inch	≦ 19 mm

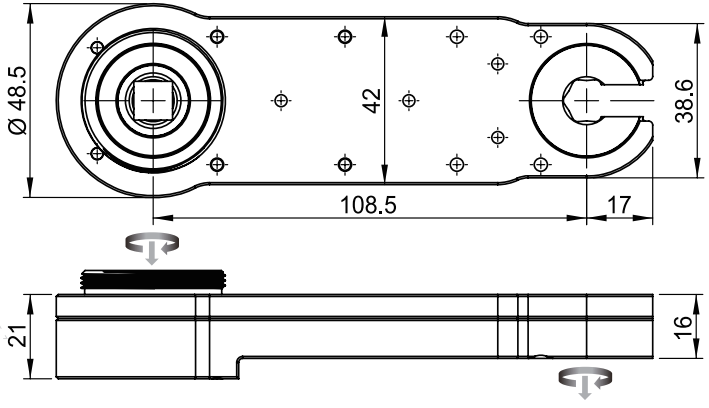

	BO-16-11-1
Maximum Input (Nm)	35
Max. Output (Nm)	23
Efficiency Factor (η)	0.66
Gear Stages	4
Gear Ratio (i)	1

BASIC-LINE BO-16-12

Technical Data	
Max. Output (Nm)	56
SW Max. (mm)	29
Radius (mm)	29.5
Height (mm)	16

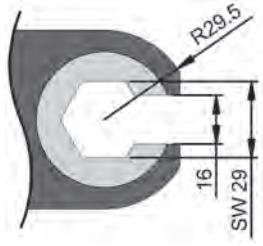

Gear Socket type & Dimension		
(HEX)	≦ 1-1/8 inch	≦ 29 mm

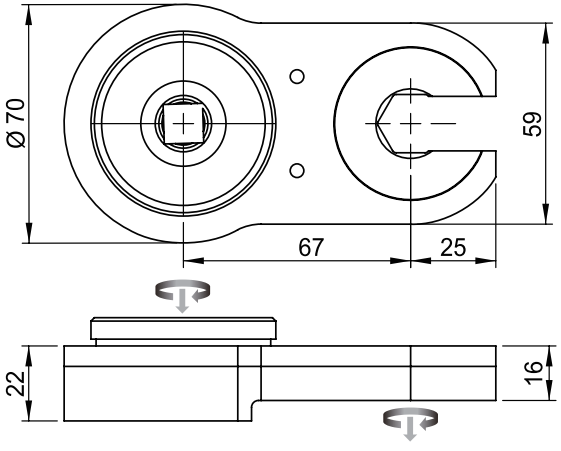

	BO-16-12-1
Maximum Input (Nm)	70
Max. Output (Nm)	56
Efficiency Factor (η)	0.81
Gear Stages	2
Gear Ratio (i)	1

Du-Pas®

BASIC-LINE BO-16-13

Technical Data	
Max. Output (Nm)	23
SW Max. (mm)	13
Radius (mm)	13
Height (mm)	16

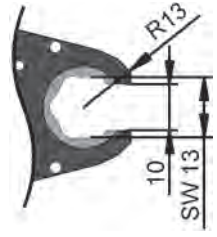

Gear Socket type & Dimension		
(HEX)	≦ 1/2 inch	≦ 13 mm
(HD)	≦ 1/2 inch	≦ 13 mm

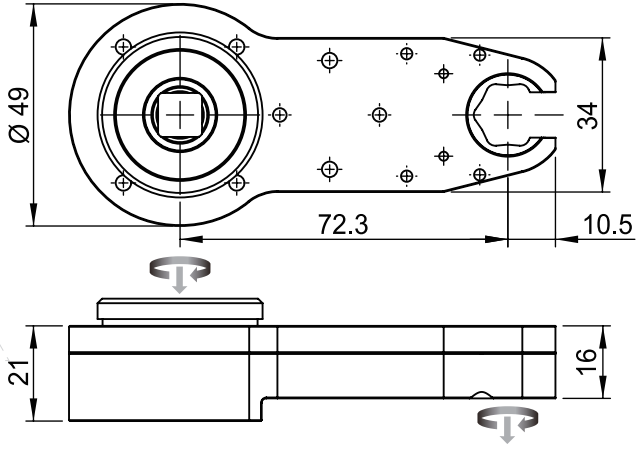

	BO-16-13-1
Maximum Input (Nm)	35
Max. Output (Nm)	23
Efficiency Factor (η)	0.66
Gear Stages	4
Gear Ratio (i)	1

BASIC-LINE BO-18-1

Technical Data	
Max. Output (Nm)	48
SW Max. (mm)	26
Radius (mm)	26
Height (mm)	18

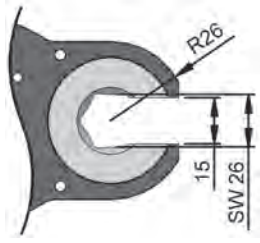

Gear Socket type & Dimension		
(HEX)	≦ 1 inch	≦ 26 mm

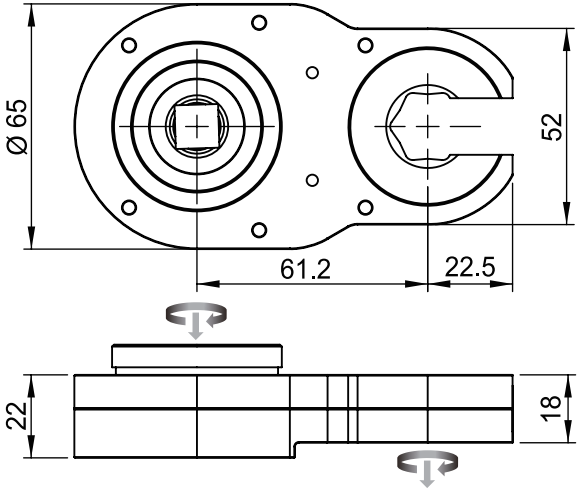

	BO-18-1-1
Maximum Input (Nm)	60
Max. Output (Nm)	48
Efficiency Factor (η)	0.81
Gear Stages	2
Gear Ratio (i)	1

Du-Pas®

BASIC-LINE BO-23-1

Technical Data	
Max. Output (Nm)	56
SW Max. (mm)	28
Radius (mm)	28
Height (mm)	23

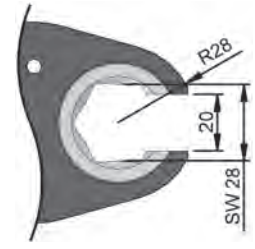

Gear Socket type & Dimension		
(HEX)	≦ 1-3/32 inch	≦ 28 mm

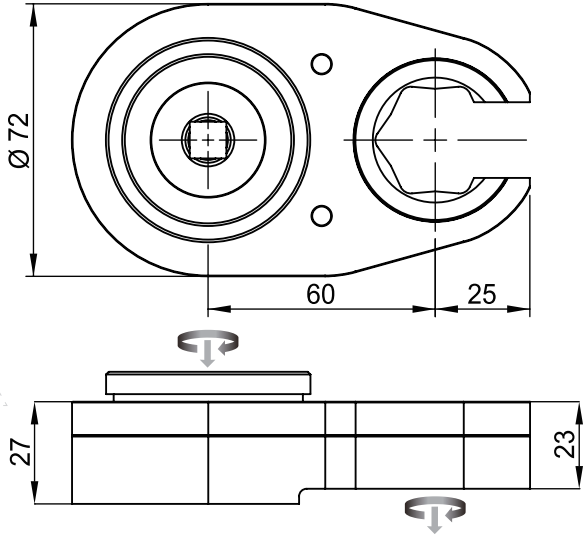

	BO-23-1-1
Maximum Input (Nm)	70
Max. Output (Nm)	56
Efficiency Factor (η)	0.81
Gear Stages	2
Gear Ratio (i)	1

IN-LINE

IC - 0° close type

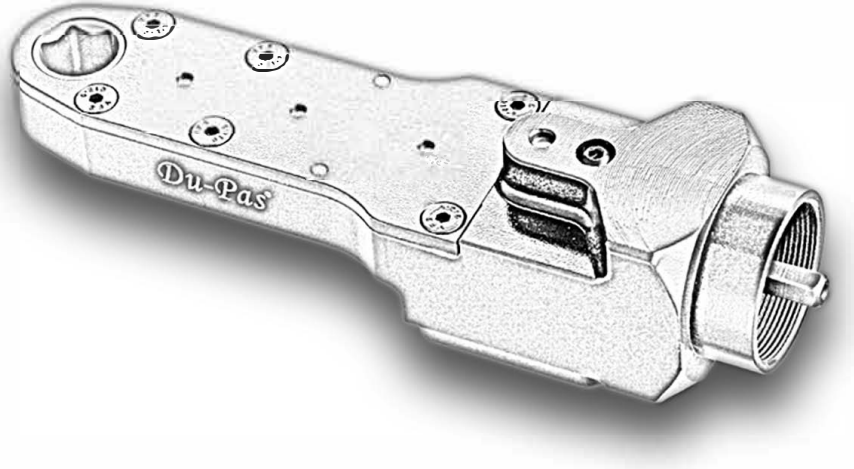

IN-LINE IC-10-1

Technical Data	
Max. Output (Nm)	15
SW Max. (mm)	13
Radius (mm)	13
Height (mm)	10

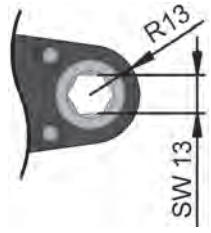

Gear Socket type & Dimension		
(HEX)	≦ 1/2 inch	≦ 13 mm

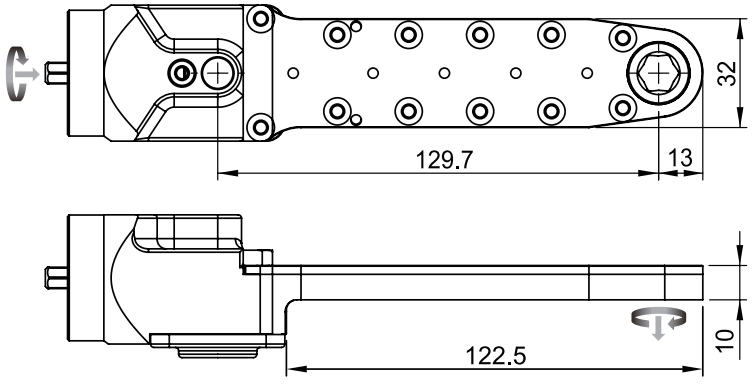

	IC-10-1-1
Maximum Input (Nm)	13
Max. Output (Nm)	15
Efficiency Factor (η)	0.53
Gear Stages	6
Gear Ratio (i)	2.24

Du-Pas®

IN-LINE IC-10-2

IC

Technical Data	
Max. Output (Nm)	20
SW Max. (mm)	21
Radius (mm)	19
Height (mm)	10

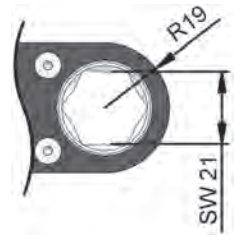

Gear Socket type & Dimension		
(HEX)	≦ 13/16 inch	≦ 21 mm

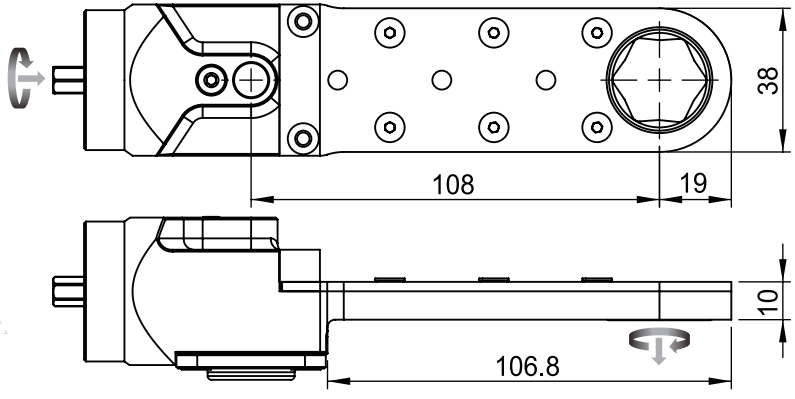

	IC-10-2-1
Maximum Input (Nm)	9
Max. Output (Nm)	20
Efficiency Factor (η)	0.66
Gear Stages	4
Gear Ratio (i)	3.43

IN-LINE IC-11-1

Technical Data	
Max. Output (Nm)	25
SW Max. (mm)	17
Radius (mm)	17
Height (mm)	11

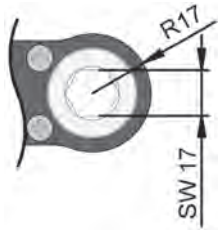

Gear Socket type & Dimension		
(HEX)	≦ 21/32 inch	≦ 17 mm

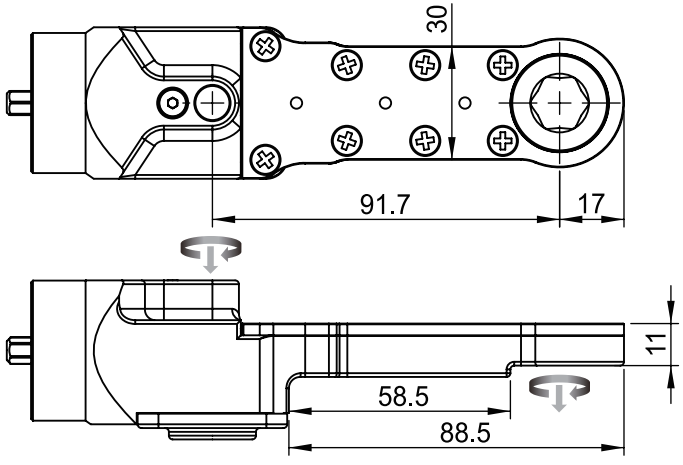

	IC-11-1-1
Maximum Input (Nm)	12
Max. Output (Nm)	25
Efficiency Factor (η)	0.66
Gear Stages	4
Gear Ratio (i)	3.09

Du-Pas®

IN-LINE IC-12-1

IC

Technical Data	
Max. Output (Nm)	25
SW Max. (mm)	10
Radius (mm)	10
Height (mm)	12

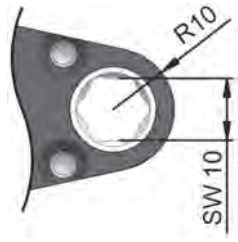

Gear Socket type & Dimension		
(HEX)	≦ 25/64 inch	≦ 10 mm

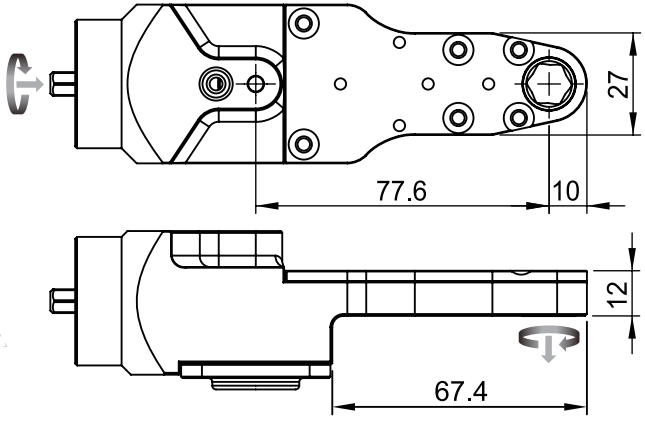

	IC-12-1-1
Maximum Input (Nm)	18
Max. Output (Nm)	25
Efficiency Factor (η)	0.66
Gear Stages	4
Gear Ratio (i)	2.13

IN-LINE IC-12-2

Technical Data	
Max. Output (Nm)	25
SW Max. (mm)	13
Radius (mm)	13
Height (mm)	12

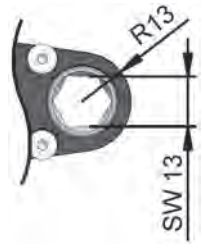

Gear Socket type & Dimension		
(HEX)	≦ 1/2 inch	≦ 13 mm

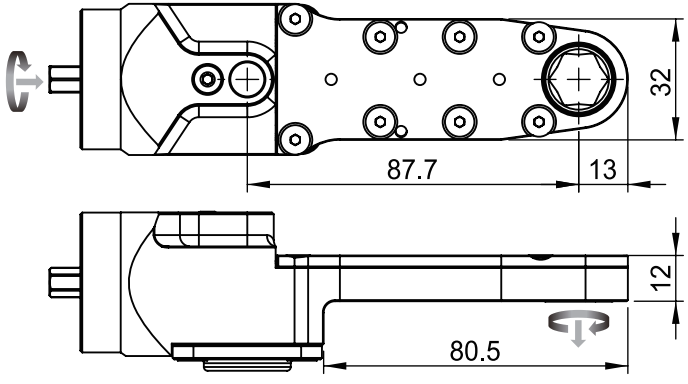

	IC-12-2-1
Maximum Input (Nm)	18
Max. Output (Nm)	25
Efficiency Factor (η)	0.66
Gear Stages	4
Gear Ratio (i)	2.15

Du-Pas®

IN-LINE IC-13-1

IC

Technical Data	
Max. Output (Nm)	20
SW Max. (mm)	16
Radius (mm)	16.5
Height (mm)	13

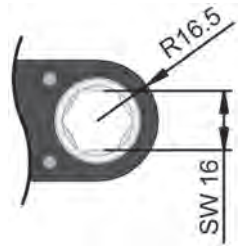

Gear Socket type & Dimension		
(HEX)	≦ 5/8 inch	≦ 16 mm

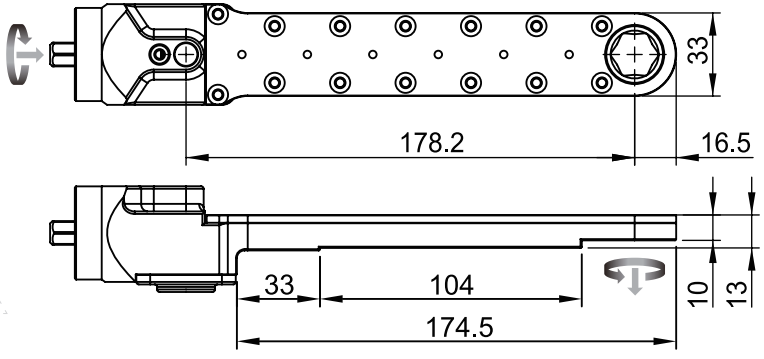

	IC-13-1-1
Maximum Input (Nm)	16
Max. Output (Nm)	20
Efficiency Factor (η)	0.48
Gear Stages	7
Gear Ratio (i)	2.67

IN-LINE IC-14-1

Technical Data	
Max. Output (Nm)	35
SW Max. (mm)	13
Radius (mm)	13
Height (mm)	14

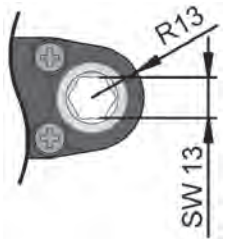

Gear Socket type & Dimension		
(HEX)	≦ 1/2 inch	≦ 13 mm

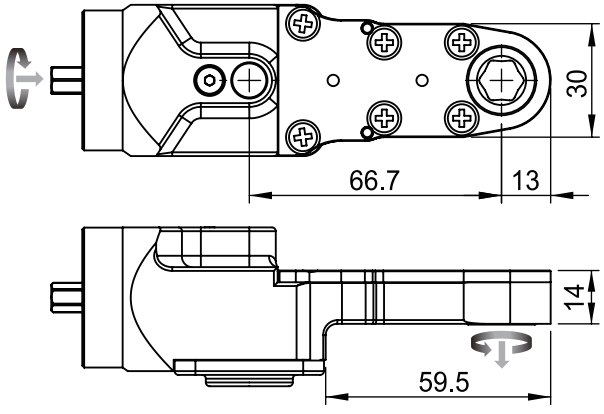

	IC-14-1-1
Maximum Input (Nm)	22
Max. Output (Nm)	35
Efficiency Factor (η)	0.73
Gear Stages	3
Gear Ratio (i)	2.15

Du-Pas®

IN-LINE IC-14-1

IC

Technical Data	
Max. Output (Nm)	35
SW Max. (mm)	13
Radius (mm)	13
Height (mm)	14

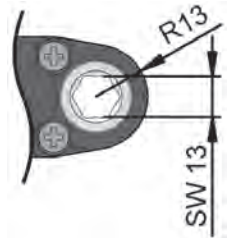

Gear Socket type & Dimension		
(HEX)	≦ 1/2 inch	≦ 13 mm

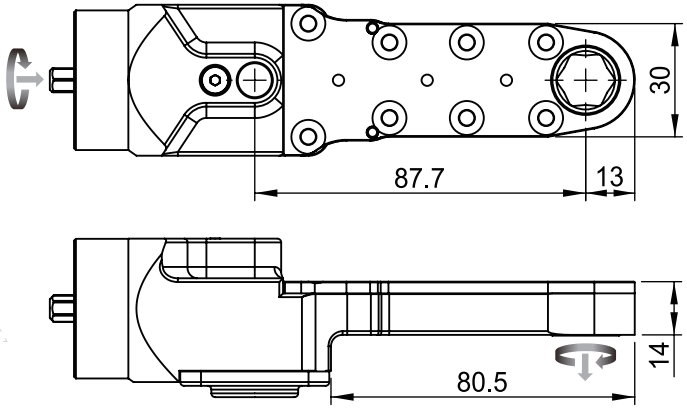

	IC-14-1-2
Maximum Input (Nm)	25
Max. Output (Nm)	35
Efficiency Factor (η)	0.66
Gear Stages	4
Gear Ratio (i)	2.15

IN-LINE IC-14-2

Technical Data	
Max. Output (Nm)	35
SW Max. (mm)	15
Radius (mm)	15
Height (mm)	14

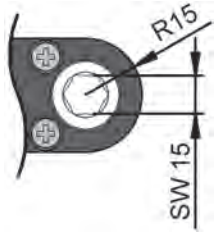

Gear Socket type & Dimension		
(HEX)	≦ 37/64 inch	≦ 15 mm

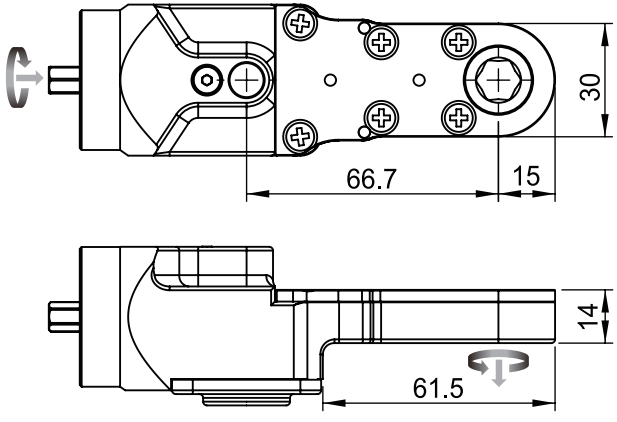

	IC-14-2-1
Maximum Input (Nm)	22
Max. Output (Nm)	35
Efficiency Factor (η)	0.73
Gear Stages	3
Gear Ratio (i)	2.15

Du-Pas®

IC

IN-LINE IC-14-3

Technical Data	
Max. Output (Nm)	25
SW Max. (mm)	10
Radius (mm)	10
Height (mm)	14

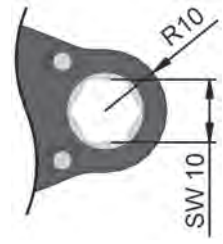

Gear Socket type & Dimension		
(HEX)	≦ 25/64 inch	≦ 10 mm

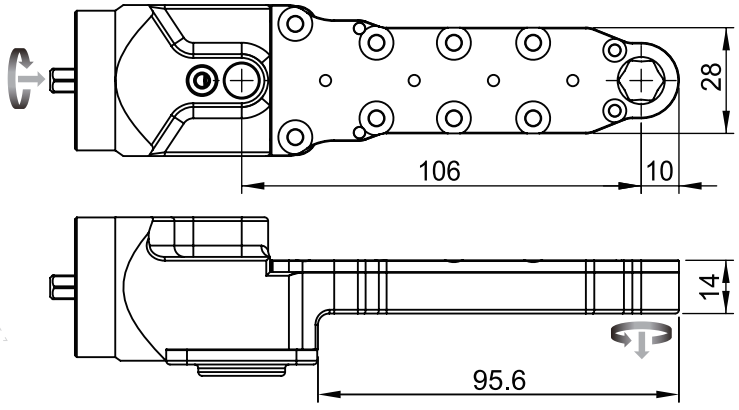

	IC-14-3-1
Maximum Input (Nm)	28
Max. Output (Nm)	25
Efficiency Factor (η)	0.59
Gear Stages	5
Gear Ratio (i)	1.54

IN-LINE IC-14-4

Technical Data	
Max. Output (Nm)	35
SW Max. (mm)	12
Radius (mm)	12
Height (mm)	14

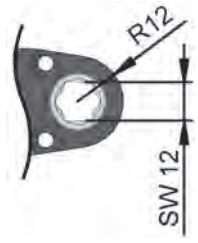

Gear Socket type & Dimension		
(HEX)	≦ 15/32 inch	≦ 12 mm
(SD)	≦ 21/32 inch	

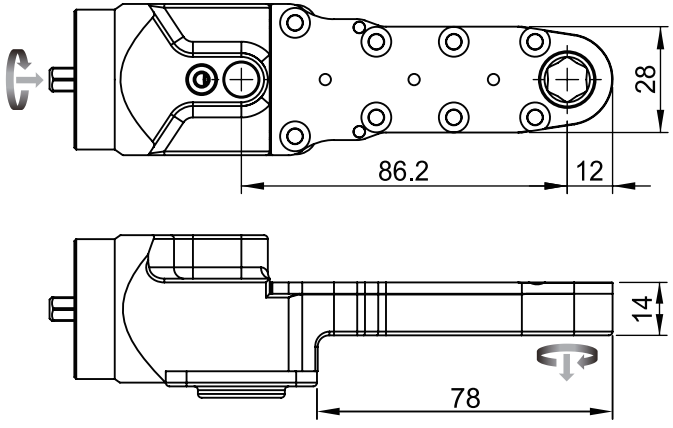

	IC-14-4-1
Maximum Input (Nm)	29
Max. Output (Nm)	35
Efficiency Factor (η)	0.66
Gear Stages	4
Gear Ratio (i)	1.85

Du-Pas®

IN-LINE IC-14-4

IC

Technical Data	
Max. Output (Nm)	35
SW Max. (mm)	12
Radius (mm)	12
Height (mm)	14

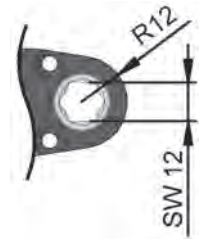

Gear Socket type & Dimension		
(HEX)	≦ 15/32 inch	≦ 12 mm
(SD)	≦ 21/32 inch	

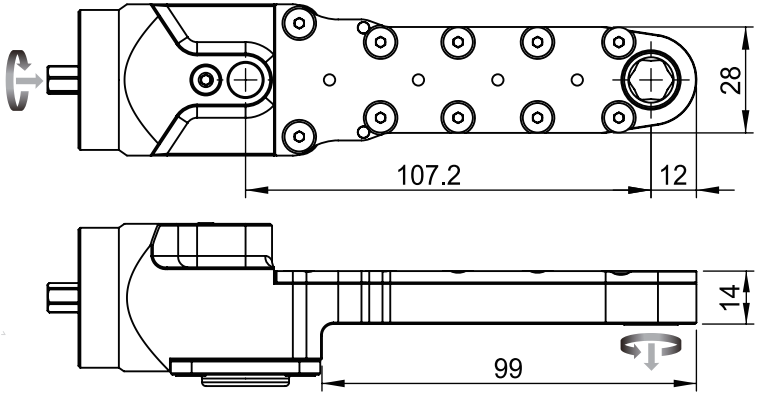

	IC-14-4-2
Maximum Input (Nm)	32
Max. Output (Nm)	35
Efficiency Factor (η)	0.59
Gear Stages	5
Gear Ratio (i)	1.85

IN-LINE IC-14-5

Technical Data	
Max. Output (Nm)	35
SW Max. (mm)	11
Radius (mm)	11
Height (mm)	14

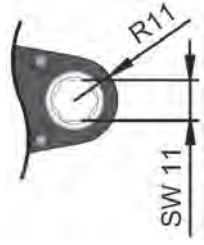

Gear Socket type & Dimension		
(HEX)	≦ 27/64 inch	≦ 11 mm

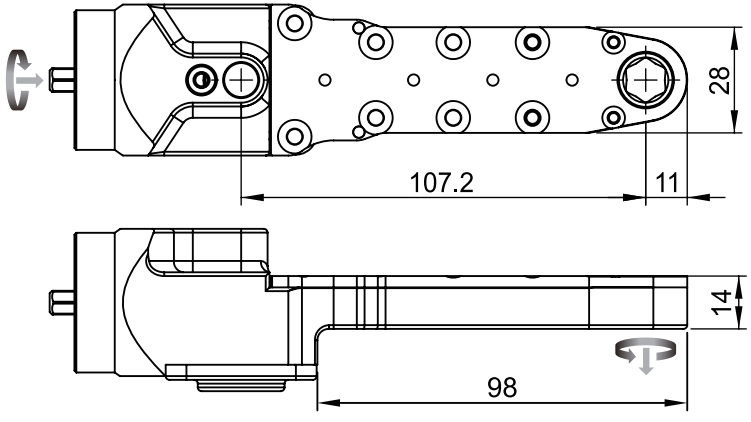

	IC-14-5-1
Maximum Input (Nm)	32
Max. Output (Nm)	35
Efficiency Factor (η)	0.59
Gear Stages	5
Gear Ratio (i)	1.85

Du-Pas®

IN-LINE IC-14-6

IC

Technical Data	
Max. Output (Nm)	35
SW Max. (mm)	13
Radius (mm)	13
Height (mm)	14

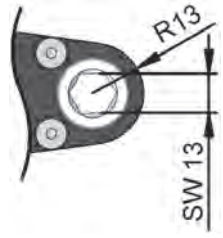

Gear Socket type & Dimension		
(HEX)	≦ 1/2 inch	≦ 13 mm
(SD)	≦ 23/32 inch	

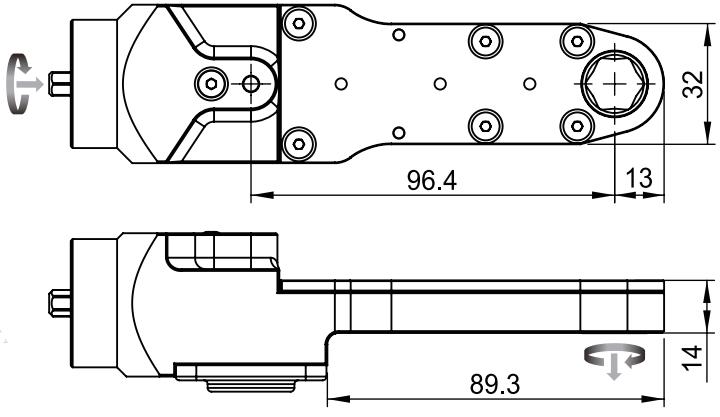

	IC-14-6-1
Maximum Input (Nm)	25
Max. Output (Nm)	35
Efficiency Factor (η)	0.66
Gear Stages	4
Gear Ratio (i)	2.15

IN-LINE IC-14-6

Technical Data	
Max. Output (Nm)	35
SW Max. (mm)	13
Radius (mm)	13
Height (mm)	14

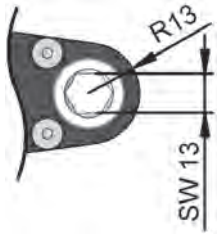

Gear Socket type & Dimension		
(HEX)	≦ 1/2 inch	≦ 13 mm
(SD)	≦ 23/32 inch	

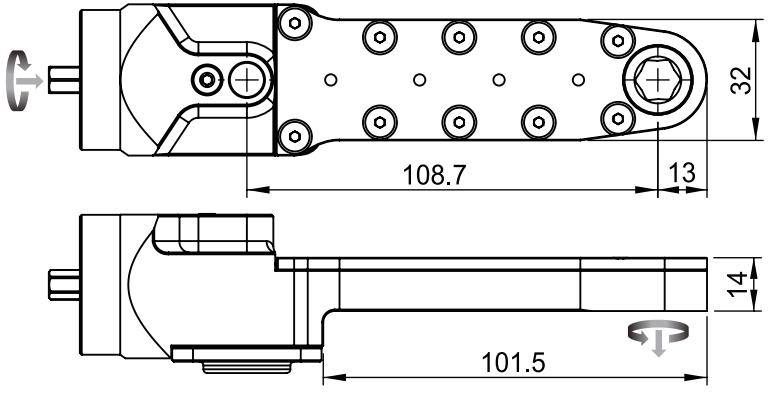

	IC-14-6-2
Maximum Input (Nm)	28
Max. Output (Nm)	35
Efficiency Factor (η)	0.59
Gear Stages	5
Gear Ratio (i)	2.15

Du-Pas®

IC

IN-LINE IC-14-6

Technical Data	
Max. Output (Nm)	35
SW Max. (mm)	13
Radius (mm)	13
Height (mm)	14

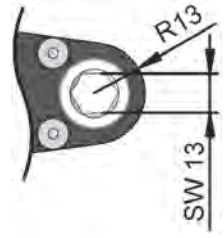

Gear Socket type & Dimension		
(HEX)	≦ 1/2 inch	≦ 13 mm
(SD)	≦ 23/32 inch	

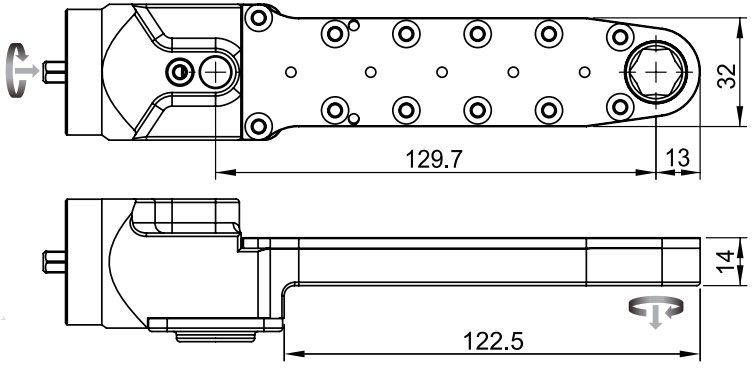

	IC-14-6-3
Maximum Input (Nm)	31
Max. Output (Nm)	35
Efficiency Factor (η)	0.53
Gear Stages	6
Gear Ratio (i)	2.15

IN-LINE IC-14-7

Technical Data	
Max. Output (Nm)	35
SW Max. (mm)	14
Radius (mm)	14
Height (mm)	14

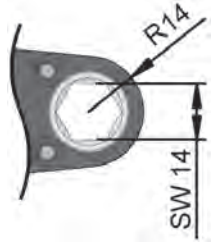

Gear Socket type & Dimension		
(HEX)	≦ 35/64 inch	≦ 14 mm

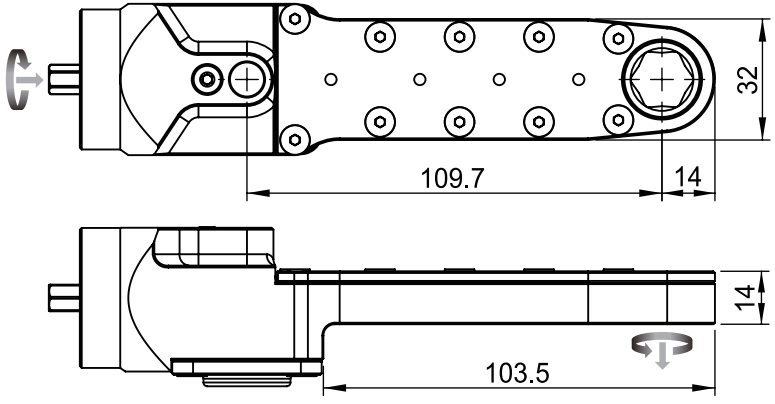

	IC-14-7-1
Maximum Input (Nm)	25
Max. Output (Nm)	35
Efficiency Factor (η)	0.59
Gear Stages	5
Gear Ratio (i)	2.36

Du-Pas®

IN-LINE IC-14-7

IC

Technical Data	
Max. Output (Nm)	35
SW Max. (mm)	14
Radius (mm)	14
Height (mm)	14

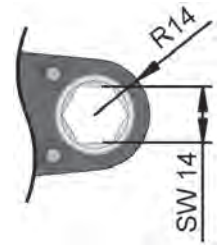

Gear Socket type & Dimension		
(HEX)	≦ 35/64 inch	≦ 14 mm

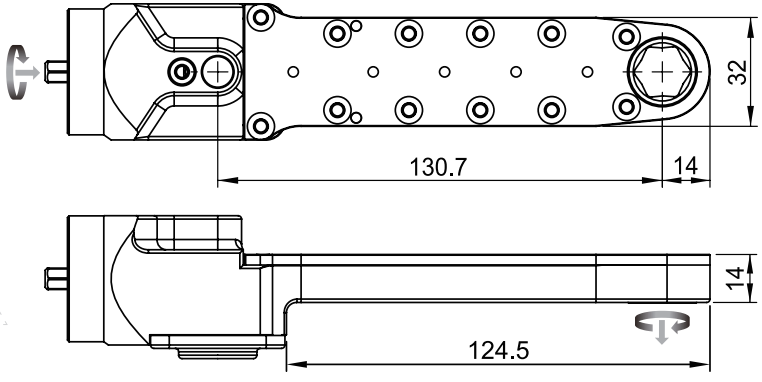

	IC-14-7-2
Maximum Input (Nm)	28
Max. Output (Nm)	35
Efficiency Factor (η)	0.53
Gear Stages	6
Gear Ratio (i)	2.36

IN-LINE IC-14-8

Technical Data	
Max. Output (Nm)	35
SW Max. (mm)	11
Radius (mm)	11.3
Height (mm)	14

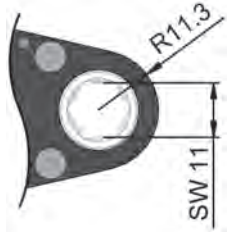

Gear Socket type & Dimension		
(HEX)	≦ 27/64 inch	≦ 11 mm

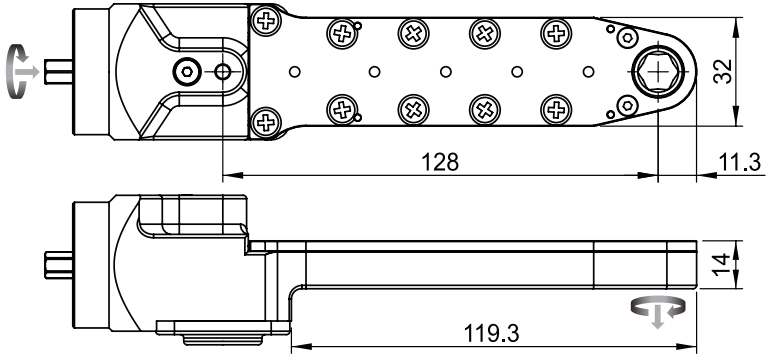

	IC-14-8-1
Maximum Input (Nm)	36
Max. Output (Nm)	35
Efficiency Factor (η)	0.53
Gear Stages	6
Gear Ratio (i)	1.85

Du-Pas®

IN-LINE IC-16-1

IC

Technical Data	
Max. Output (Nm)	35
SW Max. (mm)	11
Radius (mm)	11
Height (mm)	16

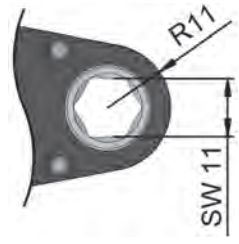

Gear Socket type & Dimension		
(HEX)	≦ 27/64 inch	≦ 11 mm

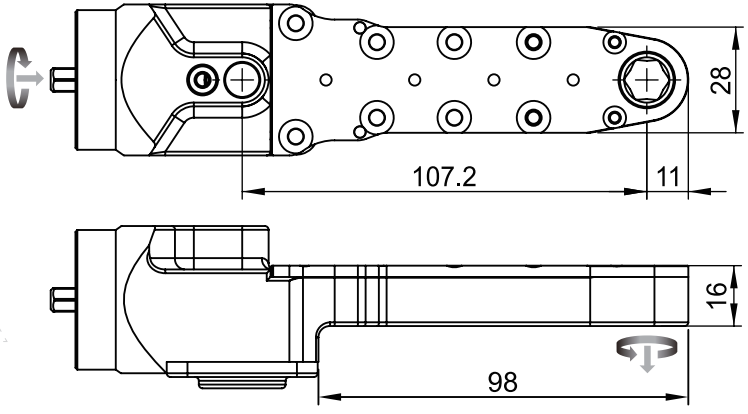

	IC-16-1-1
Maximum Input (Nm)	31
Max. Output (Nm)	35
Efficiency Factor (η)	0.59
Gear Stages	5
Gear Ratio (i)	1.92

IN-LINE IC-16-2

Technical Data	
Max. Output (Nm)	35
SW Max. (mm)	13
Radius (mm)	13
Height (mm)	16

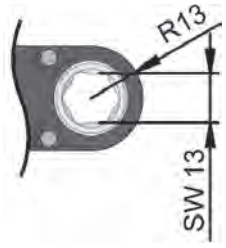

Gear Socket type & Dimension		
(HEX)	≦ 1/2 inch	≦ 13 mm

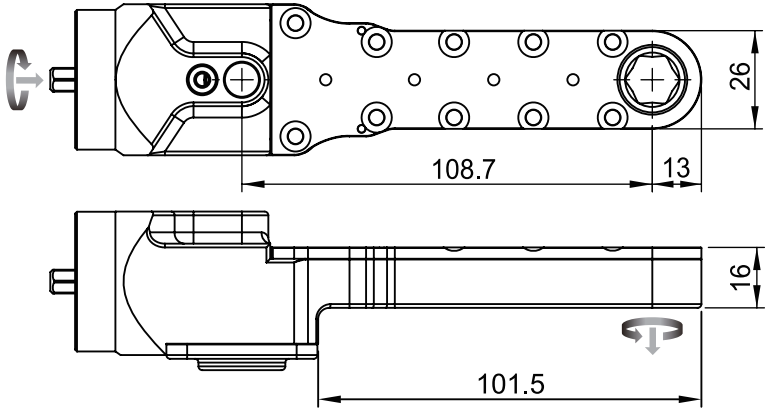

	IC-16-2-1
Maximum Input (Nm)	28
Max. Output (Nm)	35
Efficiency Factor (η)	0.59
Gear Stages	5
Gear Ratio (i)	2.15

Du-Pas®

IN-LINE IC-16-3

IC

Technical Data	
Max. Output (Nm)	40
SW Max. (mm)	14
Radius (mm)	14
Height (mm)	16

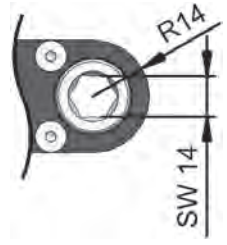

Gear Socket type & Dimension		
(HEX)	≦ 35/64 inch	≦ 14 mm

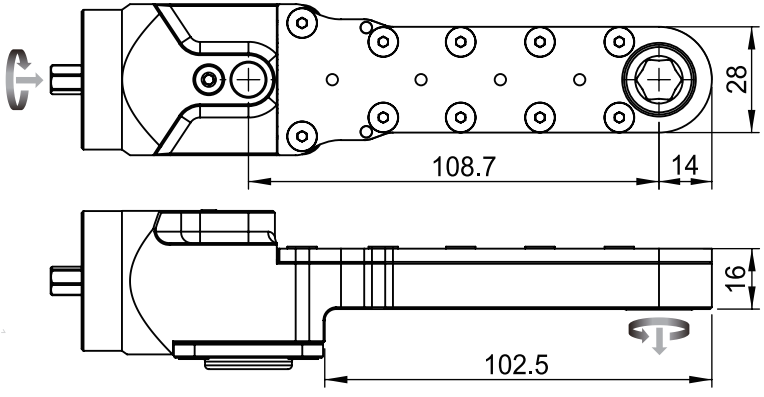

	IC-16-3-1
Maximum Input (Nm)	32
Max. Output (Nm)	40
Efficiency Factor (η)	0.59
Gear Stages	5
Gear Ratio (i)	2.15

IN-LINE IC-16-3

Technical Data	
Max. Output (Nm)	40
SW Max. (mm)	14
Radius (mm)	14
Height (mm)	16

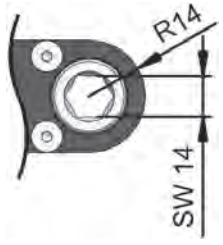

Gear Socket type & Dimension		
(HEX)	≦ 35/64 inch	≦ 14 mm

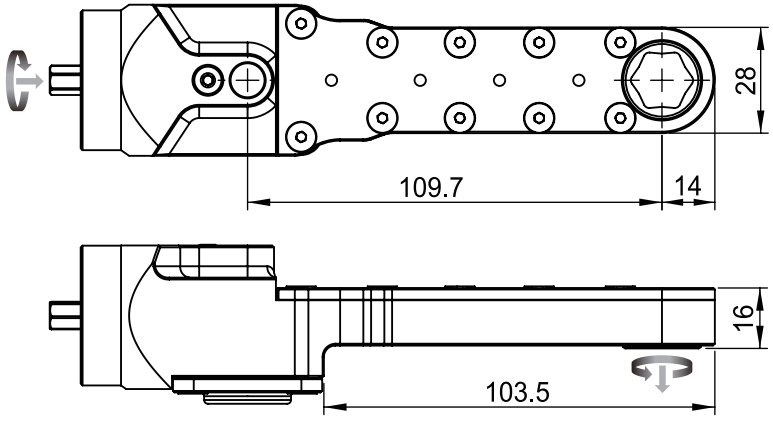

	IC-16-3-2
Maximum Input (Nm)	29
Max. Output (Nm)	40
Efficiency Factor (η)	0.59
Gear Stages	5
Gear Ratio (i)	2.36

Du-Pas®

IN-LINE IC-16-3

IC

Technical Data	
Max. Output (Nm)	40
SW Max. (mm)	14
Radius (mm)	14
Height (mm)	16

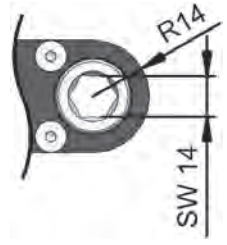

Gear Socket type & Dimension		
(HEX)	≦ 35/64 inch	≦ 14 mm

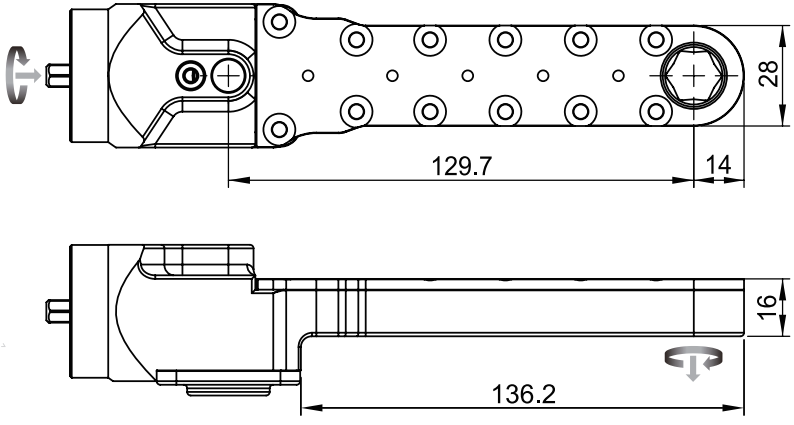

	IC-16-3-3
Maximum Input (Nm)	35
Max. Output (Nm)	40
Efficiency Factor (η)	0.53
Gear Stages	6
Gear Ratio (i)	2.15

IN-LINE IC-16-4

Technical Data	
Max. Output (Nm)	45
SW Max. (mm)	25
Radius (mm)	22
Height (mm)	16

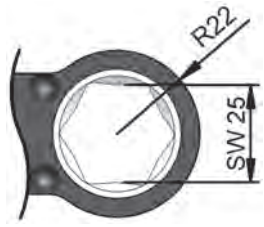

Gear Socket type & Dimension		
(HEX)	≦ 31/32 inch	≦ 25 mm

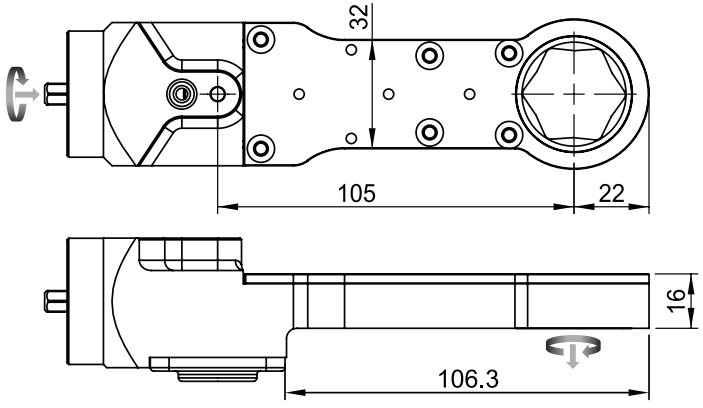

	IC-16-4-1
Maximum Input (Nm)	18
Max. Output (Nm)	45
Efficiency Factor (η)	0.66
Gear Stages	4
Gear Ratio (i)	3.83

Du-Pas®

IN-LINE IC-16-5

IC

Technical Data	
Max. Output (Nm)	40
SW Max. (mm)	13
Radius (mm)	13
Height (mm)	16

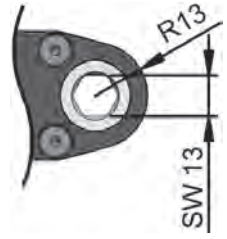

Gear Socket type & Dimension		
(HEX)	≦ 1/2 inch	≦ 13 mm

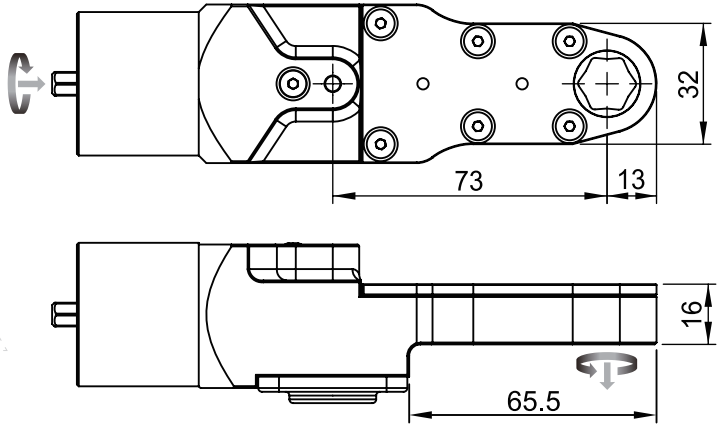

	IC-16-5-1
Maximum Input (Nm)	25
Max. Output (Nm)	40
Efficiency Factor (η)	0.73
Gear Stages	3
Gear Ratio (i)	2.17

IN-LINE IC-16-5

Technical Data	
Max. Output (Nm)	40
SW Max. (mm)	13
Radius (mm)	13
Height (mm)	16

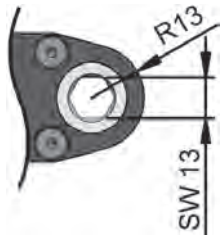

Gear Socket type & Dimension		
(HEX)	≦ 1/2 inch	≦ 13 mm

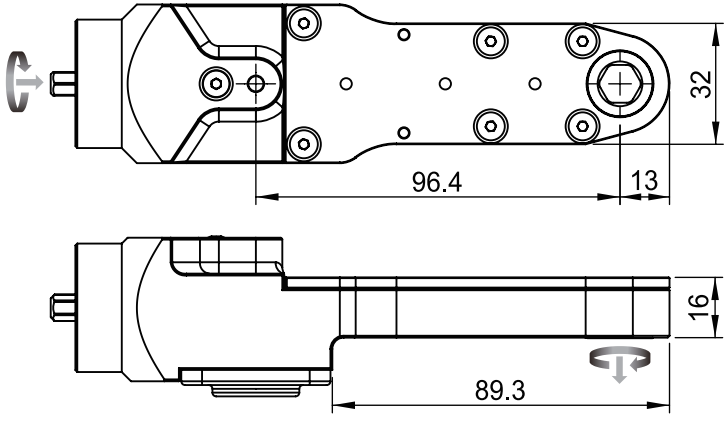

	IC-16-5-2
Maximum Input (Nm)	29
Max. Output (Nm)	40
Efficiency Factor (η)	0.66
Gear Stages	4
Gear Ratio (i)	2.09

Du-Pas®

IN-LINE IC-16-5

IC

Technical Data	
Max. Output (Nm)	40
SW Max. (mm)	13
Radius (mm)	13
Height (mm)	16

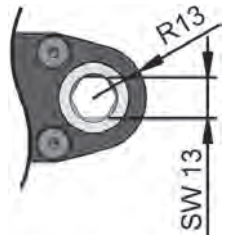

Gear Socket type & Dimension		
(HEX)	≦ 1/2 inch	≦ 13 mm

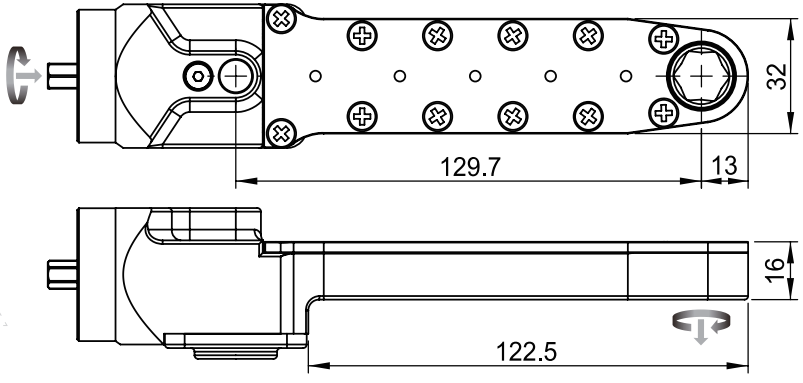

	IC-16-5-3
Maximum Input (Nm)	35
Max. Output (Nm)	40
Efficiency Factor (η)	0.53
Gear Stages	6
Gear Ratio (i)	2.15

IN-LINE IC-16-6

Technical Data	
Max. Output (Nm)	40
SW Max. (mm)	14
Radius (mm)	14
Height (mm)	16

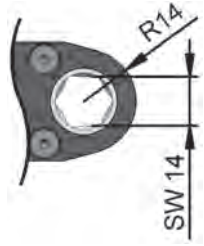

Gear Socket type & Dimension		
(HEX)	≦ 35/64 inch	≦ 14 mm
(SD)	≦ 49/64 inch	

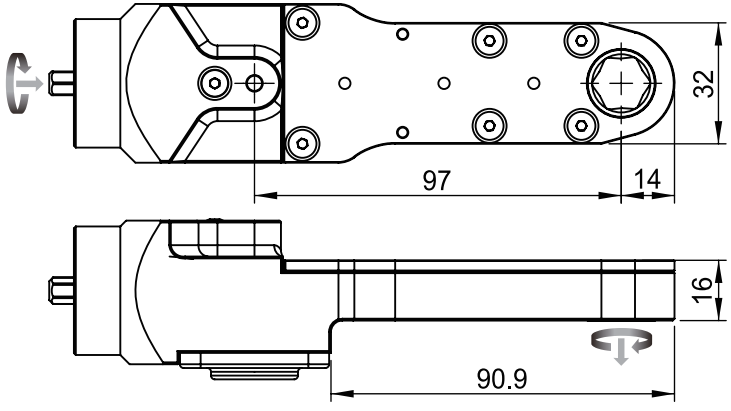

	IC-16-6-1
Maximum Input (Nm)	26
Max. Output (Nm)	40
Efficiency Factor (η)	0.66
Gear Stages	4
Gear Ratio (i)	2.3

Du-Pas®

IN-LINE IC-16-6

IC

Technical Data	
Max. Output (Nm)	40
SW Max. (mm)	14
Radius (mm)	14
Height (mm)	16

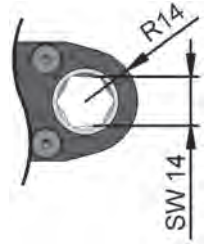

Gear Socket type & Dimension		
(HEX)	≦ 35/64 inch	≦ 14 mm
(SD)	≦ 49/64 inch	

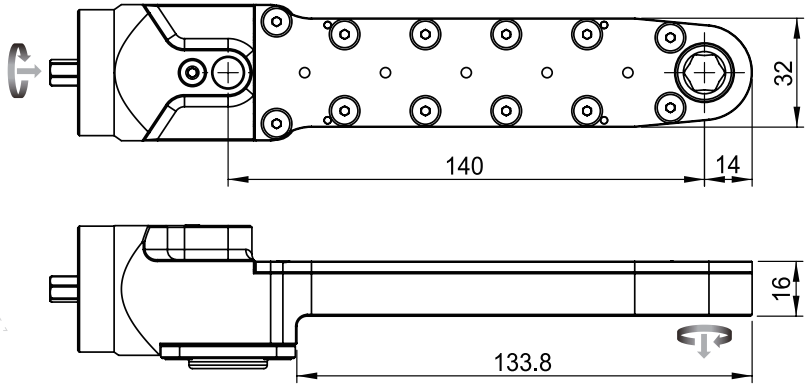

	IC-16-6-2
Maximum Input (Nm)	43
Max. Output (Nm)	40
Efficiency Factor (η)	0.53
Gear Stages	6
Gear Ratio (i)	1.74

IN-LINE IC-18-1

Technical Data	
Max. Output (Nm)	50
SW Max. (mm)	14
Radius (mm)	14
Height (mm)	18

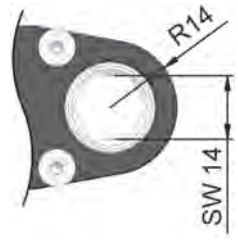

Gear Socket type & Dimension		
(HEX)	≦ 35/64 inch	≦ 14 mm
(SD)	≦ 49/64 inch	

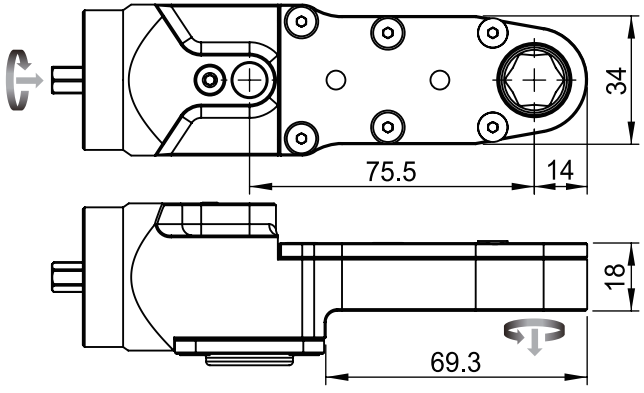

	IC-18-1-1
Maximum Input (Nm)	29
Max. Output (Nm)	50
Efficiency Factor (η)	0.73
Gear Stages	3
Gear Ratio (i)	2.37

Du-Pas®

IN-LINE IC-18-1

IC

Technical Data	
Max. Output (Nm)	50
SW Max. (mm)	14
Radius (mm)	14
Height (mm)	18

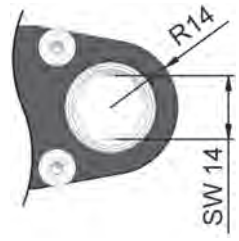

Gear Socket type & Dimension		
(HEX)	≦ 35/64 inch	≦ 14 mm
(SD)	≦ 49/64 inch	

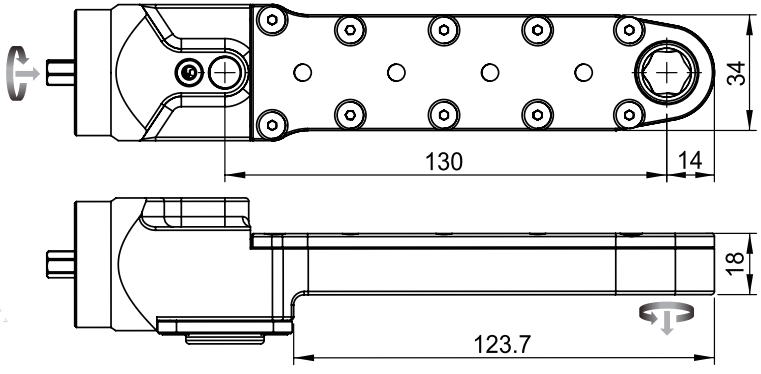

	IC-18-1-2
Maximum Input (Nm)	34
Max. Output (Nm)	45
Efficiency Factor (η)	0.59
Gear Stages	5
Gear Ratio (i)	2.24

IN-LINE IC-18-2

Technical Data	
Max. Output (Nm)	40
SW Max. (mm)	13
Radius (mm)	13
Height (mm)	18

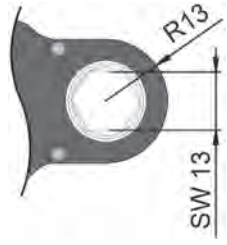

Gear Socket type & Dimension		
(HEX)	≦ 1/2 inch	≦ 13 mm

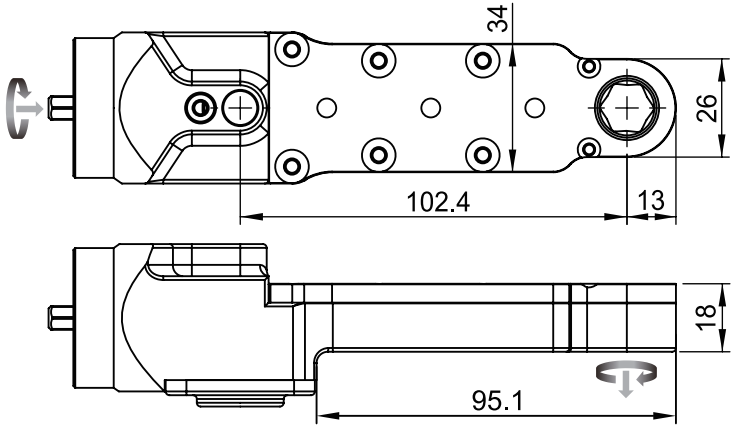

	IC-18-2-1
Maximum Input (Nm)	27
Max. Output (Nm)	40
Efficiency Factor (η)	0.66
Gear Stages	4
Gear Ratio (i)	2.24

Du-Pas®

IN-LINE IC-18-3

IC

Technical Data	
Max. Output (Nm)	50
SW Max. (mm)	17
Radius (mm)	17
Height (mm)	18

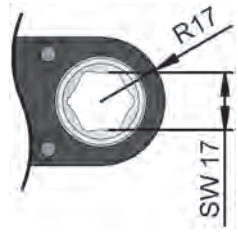

Gear Socket type & Dimension		
(HEX)	≦ 21/32 inch	≦ 17 mm

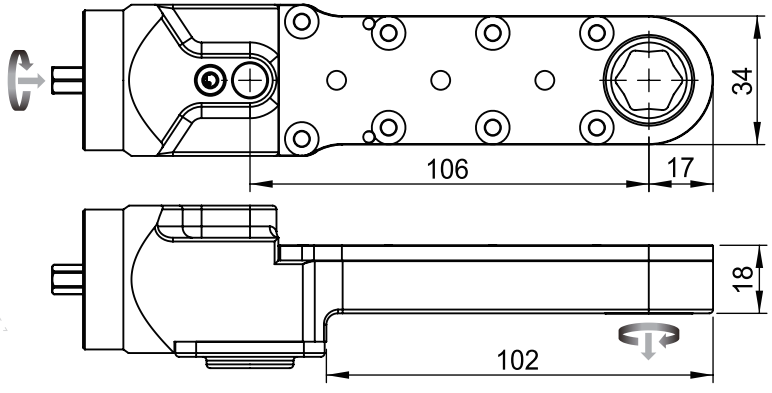

	IC-18-3-1
Maximum Input (Nm)	26
Max. Output (Nm)	50
Efficiency Factor (η)	0.66
Gear Stages	4
Gear Ratio (i)	2.9

IN-LINE IC-18-4

Technical Data	
Max. Output (Nm)	50
SW Max. (mm)	14
Radius (mm)	14
Height (mm)	18

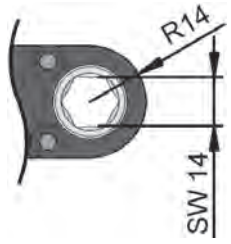

Gear Socket type & Dimension		
(HEX)	≦ 35/64 inch	≦ 14 mm
(SD)	≦ 49/64 inch	

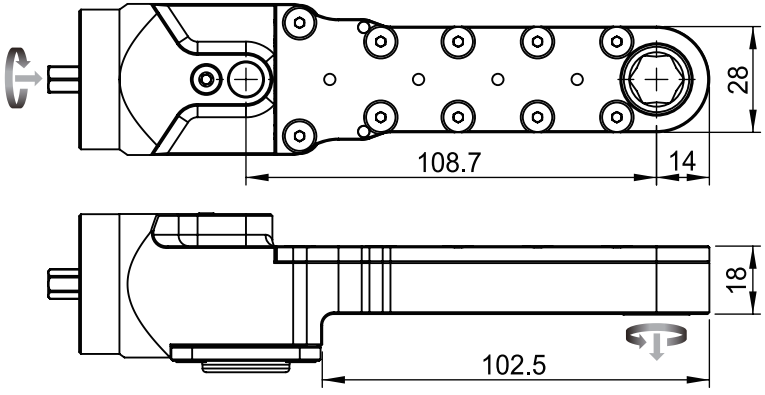

	IC-18-4-1
Maximum Input (Nm)	39
Max. Output (Nm)	50
Efficiency Factor (η)	0.59
Gear Stages	5
Gear Ratio (i)	2.15

Du-Pas®

IN-LINE IC-18-4

IC

Technical Data	
Max. Output (Nm)	50
SW Max. (mm)	14
Radius (mm)	14
Height (mm)	18

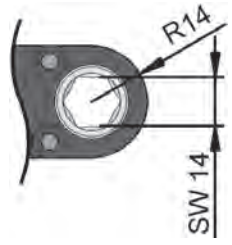

Gear Socket type & Dimension		
(HEX)	≦ 35/64 inch	≦ 14 mm
(SD)	≦ 49/64 inch	

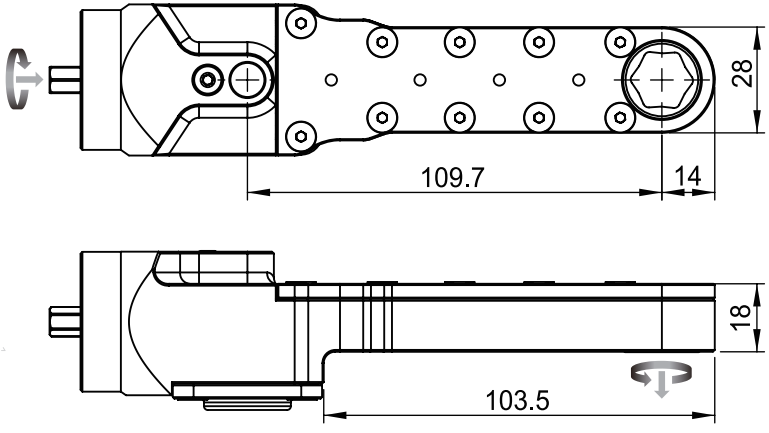

	IC-18-4-2
Maximum Input (Nm)	36
Max. Output (Nm)	50
Efficiency Factor (η)	0.59
Gear Stages	5
Gear Ratio (i)	2.36

IN-LINE IC-18-4

Technical Data	
Max. Output (Nm)	50
SW Max. (mm)	14
Radius (mm)	14
Height (mm)	18

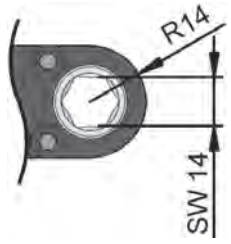

Gear Socket type & Dimension		
(HEX)	≦ 35/64 inch	≦ 14 mm
(SD)	≦ 49/64 inch	

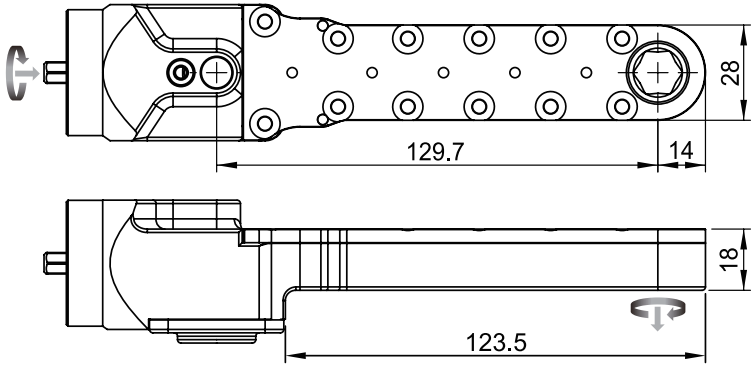

	IC-18-4-3
Maximum Input (Nm)	44
Max. Output (Nm)	50
Efficiency Factor (η)	0.53
Gear Stages	6
Gear Ratio (i)	2.15

Du-Pas®

IN-LINE IC-20-1

IC

Technical Data	
Max. Output (Nm)	60
SW Max. (mm)	14
Radius (mm)	14
Height (mm)	20

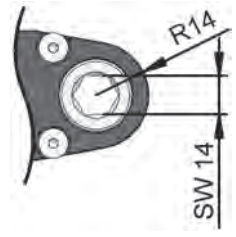

Gear Socket type & Dimension		
(HEX)	≦ 35/64 inch	≦ 14 mm

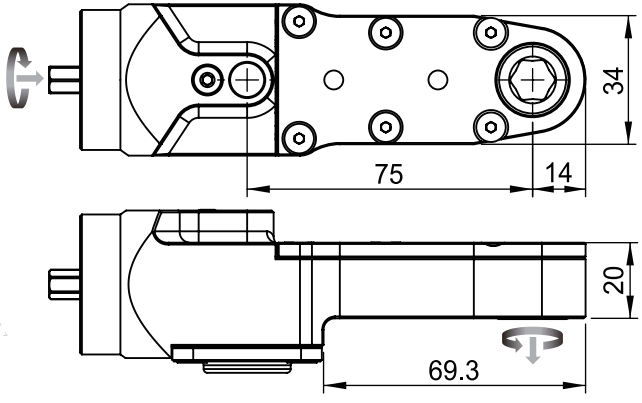

	IC-20-1-1
Maximum Input (Nm)	35
Max. Output (Nm)	60
Efficiency Factor (η)	0.73
Gear Stages	3
Gear Ratio (i)	2.37

IN-LINE IC-20-1

Technical Data	
Max. Output (Nm)	60
SW Max. (mm)	14
Radius (mm)	14
Height (mm)	20

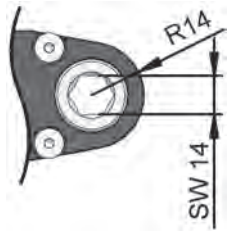

Gear Socket type & Dimension		
(HEX)	≦ 35/64 inch	≦ 14 mm

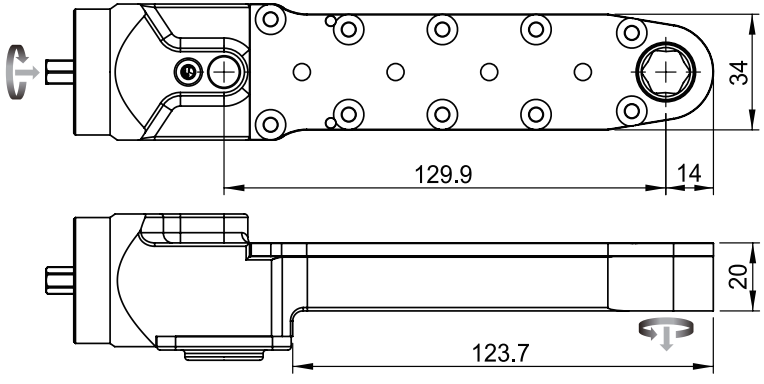

	IC-20-1-2
Maximum Input (Nm)	45
Max. Output (Nm)	60
Efficiency Factor (η)	0.59
Gear Stages	5
Gear Ratio (i)	2.24

Du-Pas®

IN-LINE IC-20-2

IC

Technical Data	
Max. Output (Nm)	60
SW Max. (mm)	17
Radius (mm)	17
Height (mm)	20

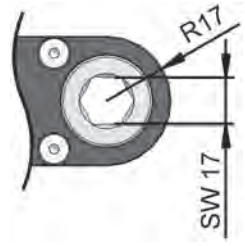

Gear Socket type & Dimension		
(HEX)	≦ 21/32 inch	≦ 17 mm

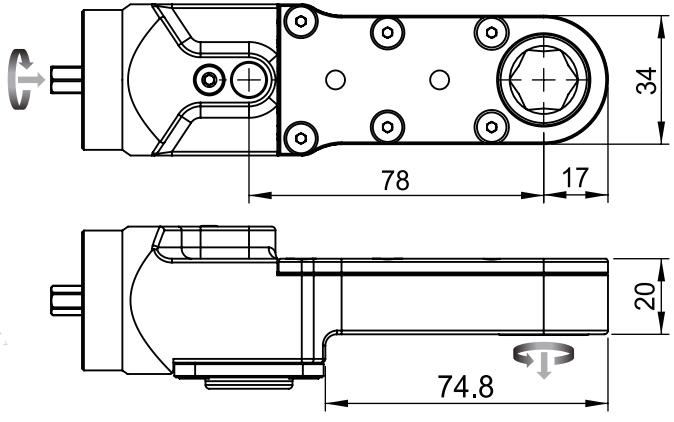

	IC-20-2-1
Maximum Input (Nm)	28
Max. Output (Nm)	60
Efficiency Factor (η)	0.73
Gear Stages	3
Gear Ratio (i)	2.90

IN-LINE IC-20-2

Technical Data	
Max. Output (Nm)	60
SW Max. (mm)	17
Radius (mm)	17
Height (mm)	20

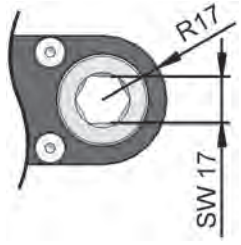

Gear Socket type & Dimension		
(HEX)	≦ 21/32 inch	≦ 17 mm

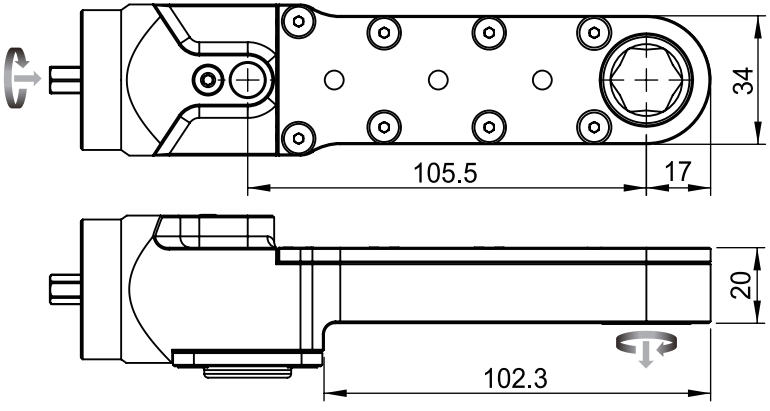

	IC-20-2-2
Maximum Input (Nm)	31
Max. Output (Nm)	60
Efficiency Factor (η)	0.66
Gear Stages	4
Gear Ratio (i)	2.90

Du-Pas®

IN-LINE IC-20-2

IC

Technical Data	
Max. Output (Nm)	60
SW Max. (mm)	17
Radius (mm)	17
Height (mm)	20

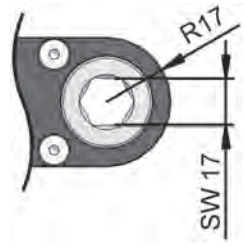

Gear Socket type & Dimension		
(HEX)	≦ 21/32 inch	≦ 17 mm

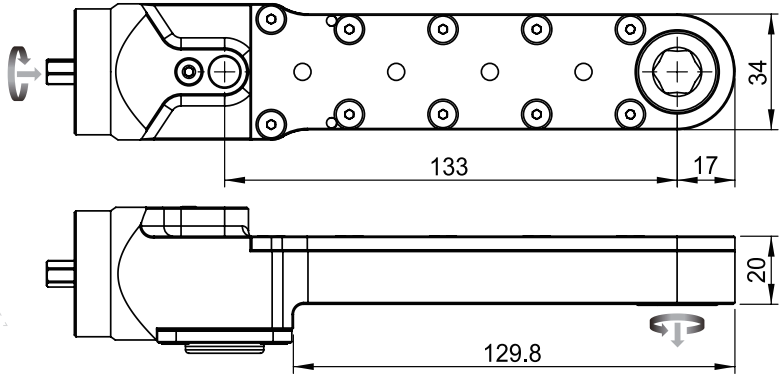

	IC-20-2-3
Maximum Input (Nm)	35
Max. Output (Nm)	60
Efficiency Factor (η)	0.59
Gear Stages	5
Gear Ratio (i)	2.90

IN-LINE IC-20-3

Technical Data	
Max. Output (Nm)	60
SW Max. (mm)	19
Radius (mm)	19
Height (mm)	20

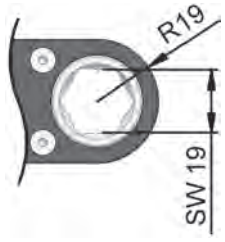

Gear Socket type & Dimension		
(HEX)	≦ 47/64 inch	≦ 19 mm

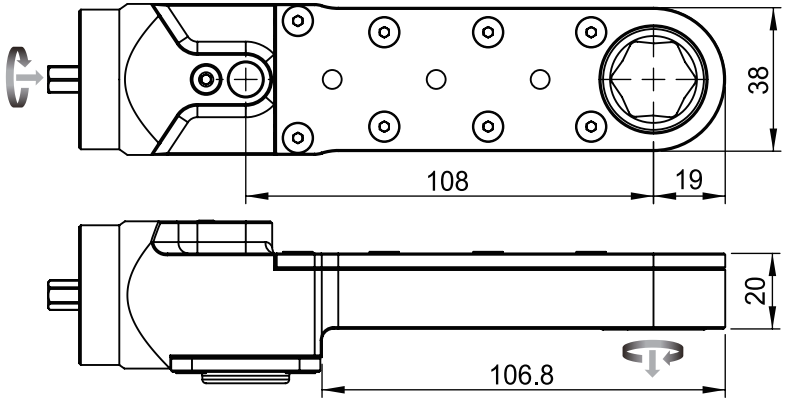

	IC-20-3-1
Maximum Input (Nm)	27
Max. Output (Nm)	60
Efficiency Factor (η)	0.66
Gear Stages	4
Gear Ratio (i)	3.43

Du-Pas®

IN-LINE IC-20-4

IC

Technical Data	
Max. Output (Nm)	65
SW Max. (mm)	19
Radius (mm)	19
Height (mm)	20

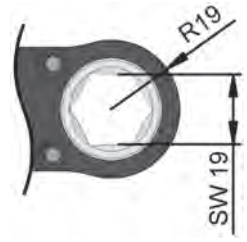

Gear Socket type & Dimension		
(HEX)	≦ 47/64 inch	≦ 19 mm

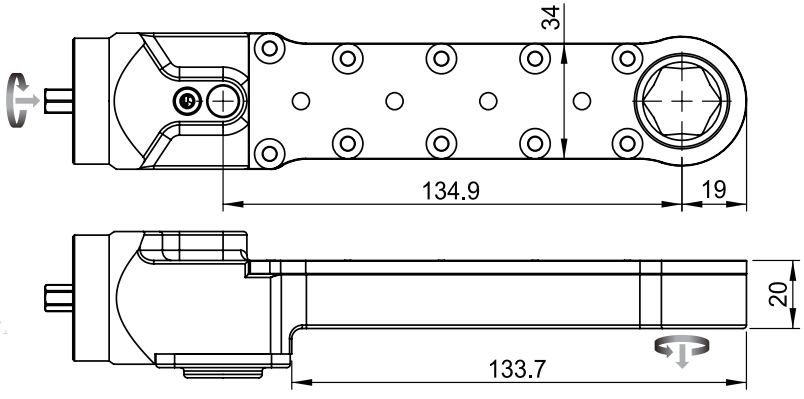

	IC-20-4-1
Maximum Input (Nm)	33
Max. Output (Nm)	65
Efficiency Factor (η)	0.59
Gear Stages	5
Gear Ratio (i)	3.30

IN-LINE IC-21-1

Technical Data	
Max. Output (Nm)	65
SW Max. (mm)	18
Radius (mm)	18
Height (mm)	21

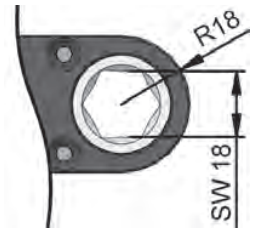

Gear Socket type & Dimension		
(HEX)	≦ 45/64 inch	≦ 18 mm

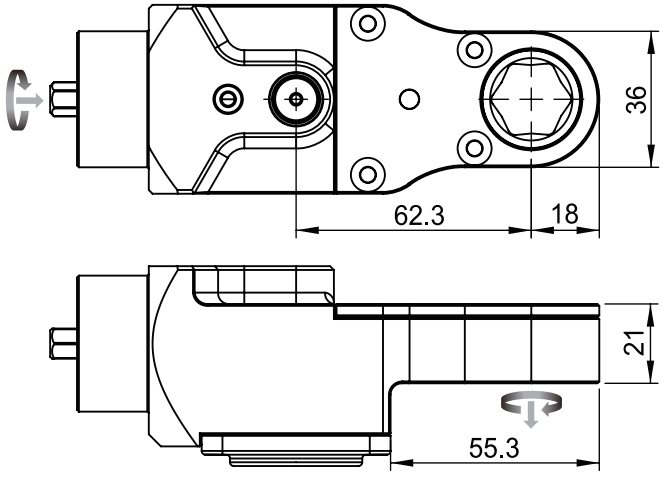

	IC-21-1-1
Maximum Input (Nm)	36
Max. Output (Nm)	65
Efficiency Factor (η)	0.81
Gear Stages	2
Gear Ratio (i)	2.26

Du-Pas®

IN-LINE IC-21-1

IC

Technical Data	
Max. Output (Nm)	65
SW Max. (mm)	18
Radius (mm)	18
Height (mm)	21

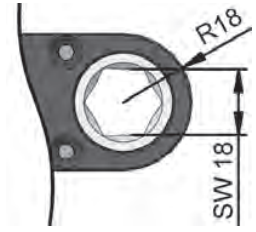

Gear Socket type & Dimension		
(HEX)	≦ 45/64 inch	≦ 18 mm

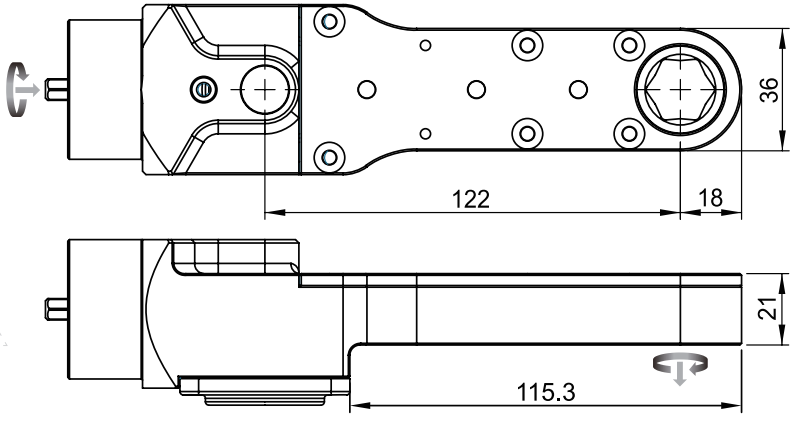

	IC-21-1-2
Maximum Input (Nm)	44
Max. Output (Nm)	65
Efficiency Factor (η)	0.66
Gear Stages	4
Gear Ratio (i)	2.26

IN-LINE IC-21-1

Technical Data	
Max. Output (Nm)	65
SW Max. (mm)	18
Radius (mm)	18
Height (mm)	21

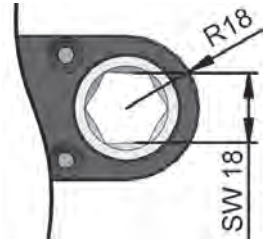

Gear Socket type & Dimension		
(HEX)	≦ 45/64 inch	≦ 18 mm

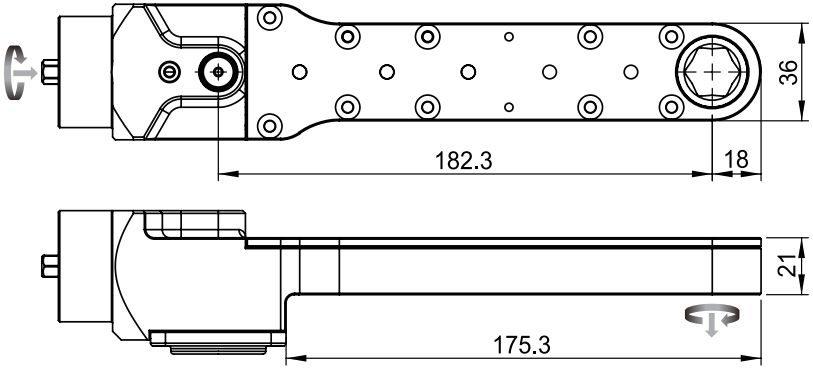

	IC-21-1-3
Maximum Input (Nm)	54
Max. Output (Nm)	65
Efficiency Factor (η)	0.53
Gear Stages	6
Gear Ratio (i)	2.26

Du-Pas®

IN-LINE IC-25-1

IC

Technical Data	
Max. Output (Nm)	80
SW Max. (mm)	21
Radius (mm)	21
Height (mm)	25

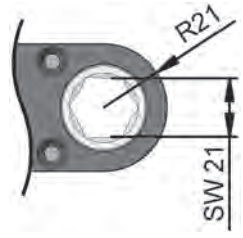

Gear Socket type & Dimension		
(HEX)	≦ 13/16 inch	≦ 21 mm
(SD)	≦ 1-5/32 inch	

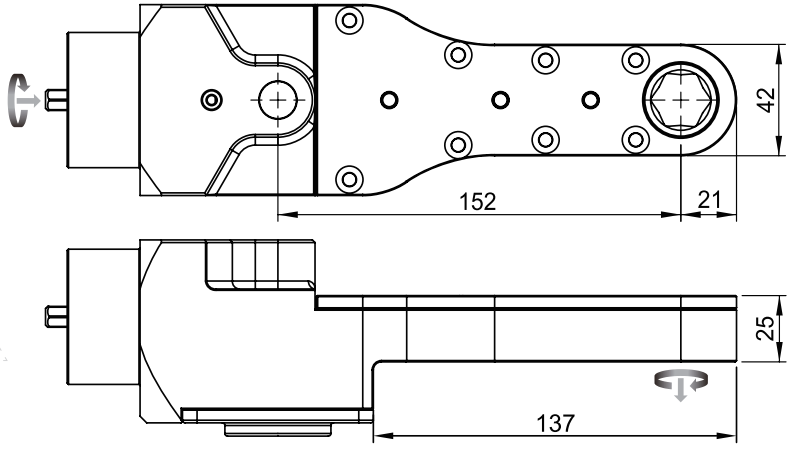

	IC-25-1-1
Maximum Input (Nm)	63
Max. Output (Nm)	80
Efficiency Factor (η)	0.66
Gear Stages	4
Gear Ratio (i)	1.92

IN-LINE IC-25-2

Technical Data	
Max. Output (Nm)	70
SW Max. (mm)	21
Radius (mm)	21.5
Height (mm)	25

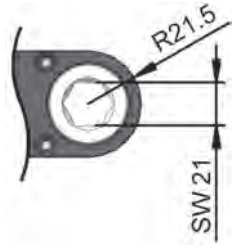

Gear Socket type & Dimension		
(HEX)	≦ 13/16 inch	≦ 21 mm

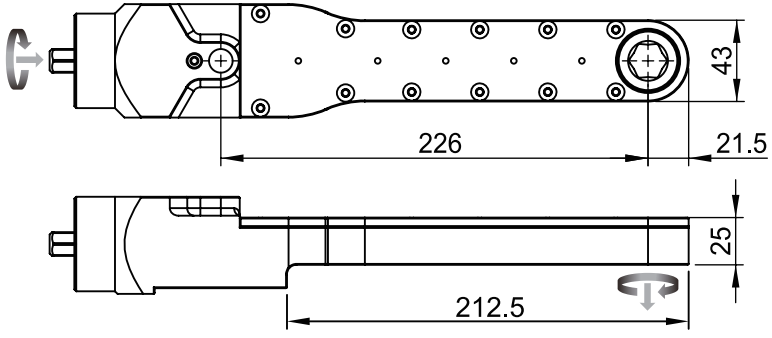

	IC-25-2-1
Maximum Input (Nm)	69
Max. Output (Nm)	70
Efficiency Factor (η)	0.53
Gear Stages	6
Gear Ratio (i)	1.92

IN-LINE

IO - 0° open type

IN-LINE IO-14-1

Technical Data	
Max. Output (Nm)	40
SW Max. (mm)	16
Radius (mm)	16
Height (mm)	14

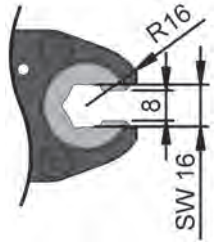

Gear Socket type & Dimension		
(HEX)	≦ 5/8 inch	≦ 16 mm

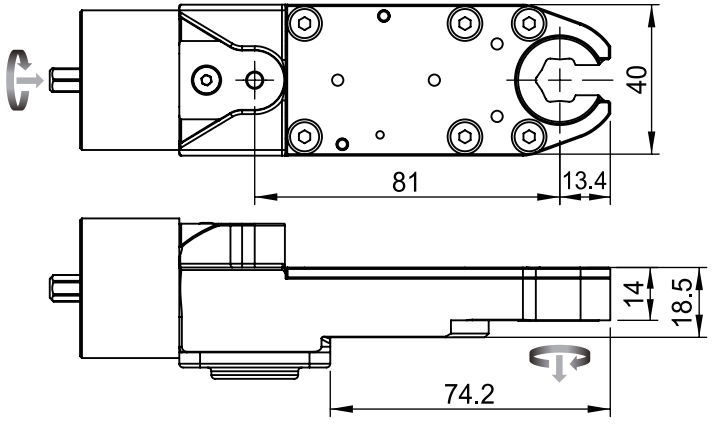

	IO-14-1-1
Maximum Input (Nm)	20
Max. Output (Nm)	40
Efficiency Factor (η)	0.66
Gear Stages	4
Gear Ratio (i)	3.07

Du-Pas®

IO

IN-LINE IO-16-1

Technical Data	
Max. Output (Nm)	56
SW Max. (mm)	22
Radius (mm)	22.5
Height (mm)	16

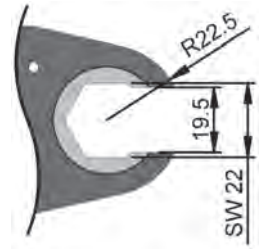

Gear Socket type & Dimension		
(HEX)	≦ 55/64 inch	≦ 22 mm

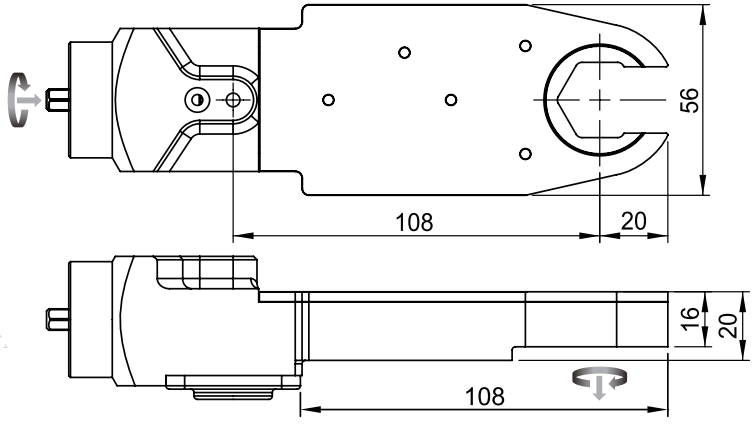

	IO-16-1-1
Maximum Input (Nm)	25
Max. Output (Nm)	56
Efficiency Factor (η)	0.66
Gear Stages	4
Gear Ratio (i)	3.45

IN-LINE IO-16-2

Technical Data	
Max. Output (Nm)	50
SW Max. (mm)	10
Radius (mm)	19.3
Height (mm)	16

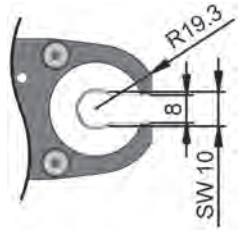

Gear Socket type & Dimension		
(HEX)	≦ 25/64 inch	≦ 10 mm

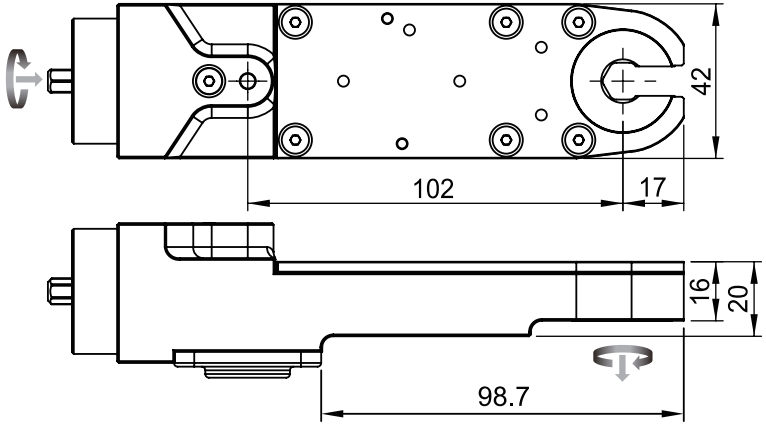

	IO-16-2-1
Maximum Input (Nm)	25
Max. Output (Nm)	50
Efficiency Factor (η)	0.66
Gear Stages	4
Gear Ratio (i)	3.07

Du-Pas®

IO

IN-LINE IO-16-3

Technical Data	
Max. Output (Nm)	50
SW Max. (mm)	19
Radius (mm)	19.3
Height (mm)	16

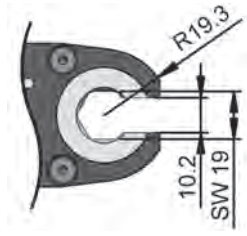

Gear Socket type & Dimension	
(HEX)	= 7/16~47/64 inch = 11~19 mm

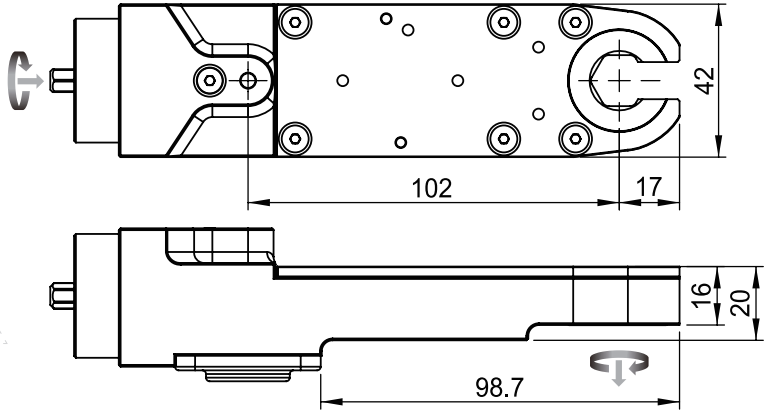

	IO-16-3-1
Maximum Input (Nm)	25
Max. Output (Nm)	50
Efficiency Factor (η)	0.66
Gear Stages	4
Gear Ratio (i)	3.07

Du-Pas®

IN-LINE IO-16-4

IO

Technical Data	
Max. Output (Nm)	56
SW Max. (mm)	22
Radius (mm)	22.5
Height (mm)	16

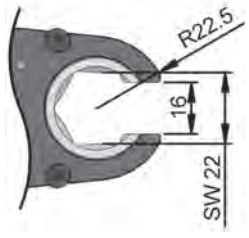

Gear Socket type & Dimension		
(HEX)	≦ 55/64 inch	≦ 22 mm

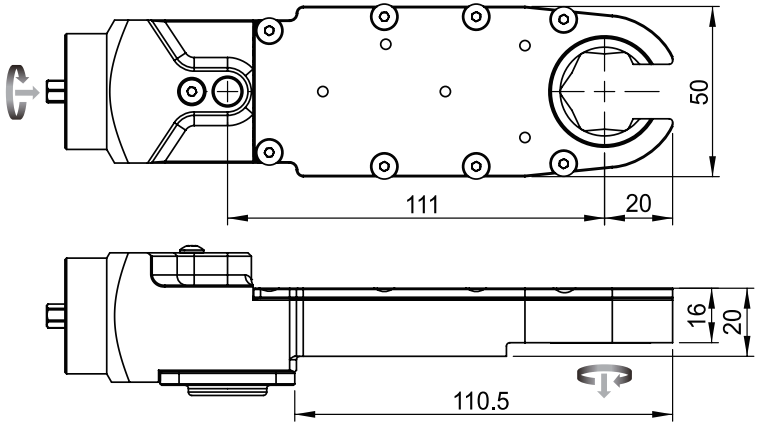

	IO-16-4-1
Maximum Input (Nm)	25
Max. Output (Nm)	56
Efficiency Factor (η)	0.66
Gear Stages	4
Gear Ratio (i)	3.45

SPECIAL-LINE

GAC - 26° close type

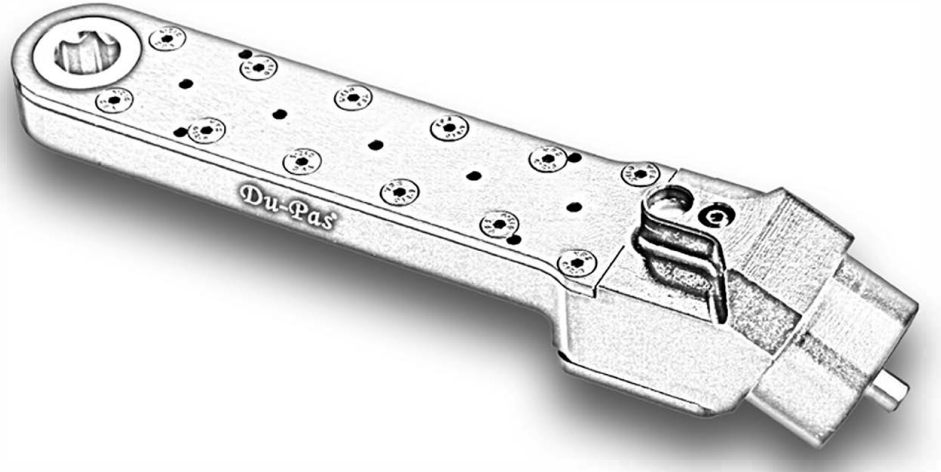

Du-Pas®

SPECIAL-LINE GAC-14-1

Technical Data	
Max. Output (Nm)	30
SW Max. (mm)	13
Radius (mm)	13
Height (mm)	14

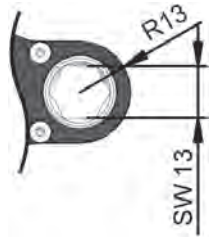

Gear Socket type & Dimension		
(HEX)	≦ 1/2 inch	≦ 13 mm

GAC

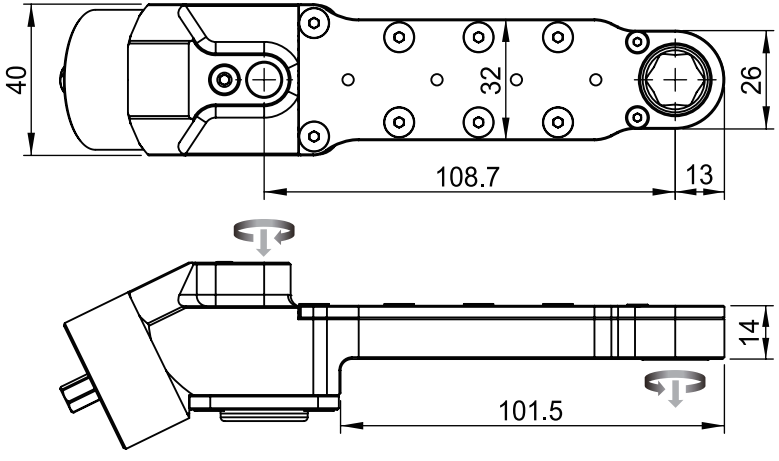

	GAC-14-1-1
Maximum Input (Nm)	24
Max. Output (Nm)	30
Efficiency Factor (η)	0.59
Gear Stages	5
Gear Ratio (i)	2.15

Du-Pas®

SPECIAL-LINE GAC-14-2

GAC

Technical Data	
Max. Output (Nm)	35
SW Max. (mm)	12
Radius (mm)	12
Height (mm)	14

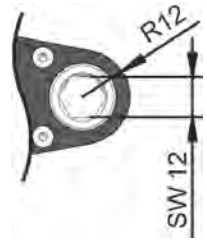

Gear Socket type & Dimension		
(HEX)	≦ 15/32 inch	≦ 12 mm

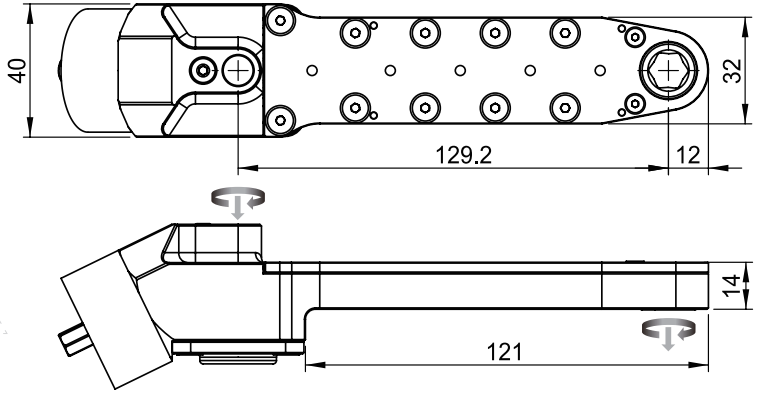

	GAC-14-2-1
Maximum Input (Nm)	32
Max. Output (Nm)	35
Efficiency Factor (η)	0.53
Gear Stages	6
Gear Ratio (i)	2.05

Du-Pas®

SPECIAL-LINE GAC-14-3

Technical Data	
Max. Output (Nm)	35
SW Max. (mm)	13
Radius (mm)	13
Height (mm)	14

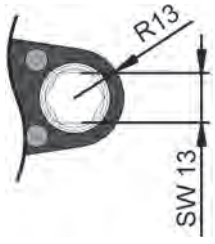

Gear Socket type & Dimension		
(HEX)	≦ 1/2 inch	≦ 13 mm

GAC

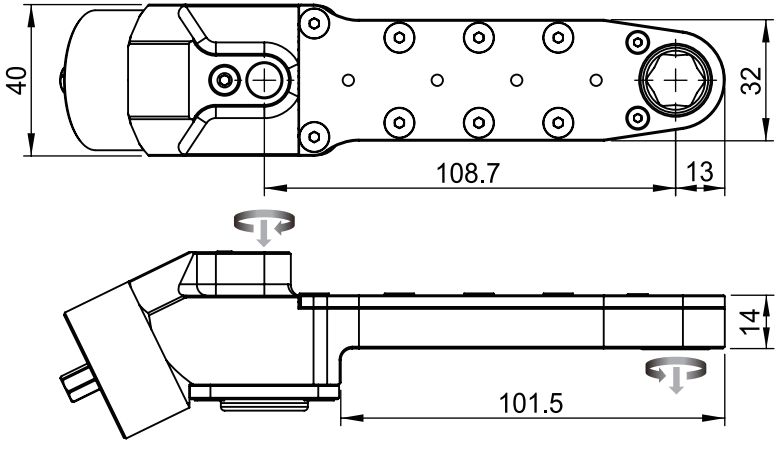

	GAC-14-3-1
Maximum Input (Nm)	28
Max. Output (Nm)	35
Efficiency Factor (η)	0.59
Gear Stages	5
Gear Ratio (i)	2.15

Du-Pas®

SPECIAL-LINE GAC-14-3

GAC

Technical Data	
Max. Output (Nm)	35
SW Max. (mm)	13
Radius (mm)	13
Height (mm)	14

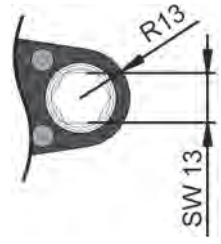

Gear Socket type & Dimension		
(HEX)	≦ 1/2 inch	≦ 13 mm

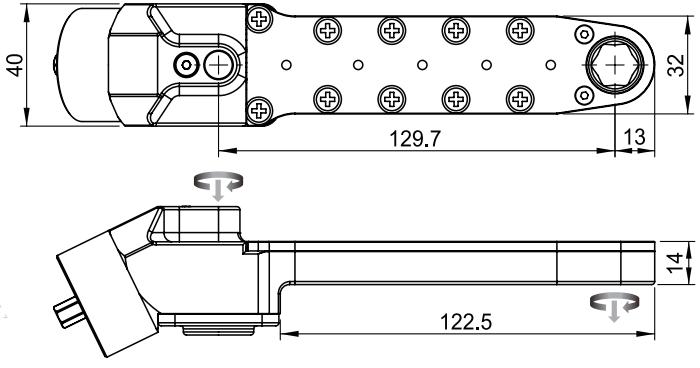

	GAC-14-3-2
Maximum Input (Nm)	31
Max. Output (Nm)	35
Efficiency Factor (η)	0.53
Gear Stages	6
Gear Ratio (i)	2.15

Du-Pas®

SPECIAL-LINE GAC-14-4

Technical Data	
Max. Output (Nm)	25
SW Max. (mm)	16
Radius (mm)	16
Height (mm)	14

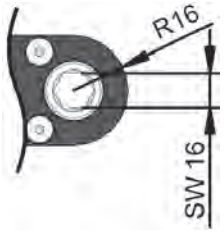

Gear Socket type & Dimension		
(HEX)	≦ 5/8 inch	≦ 16 mm

GAC

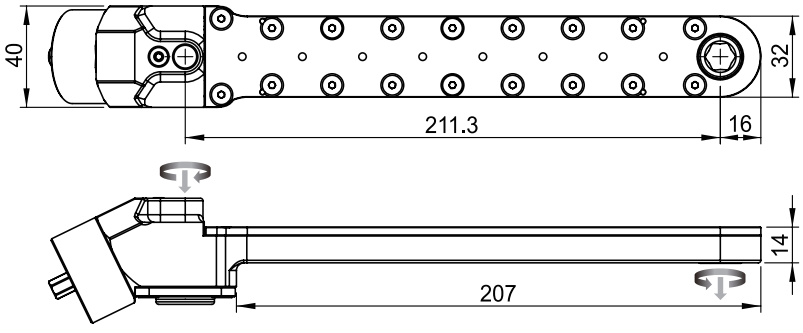

	GAC-14-4-1
Maximum Input (Nm)	30
Max. Output (Nm)	25
Efficiency Factor (η)	0.39
Gear Stages	9
Gear Ratio (i)	2.15

Du-Pas®

SPECIAL-LINE GAC-16-1

GAC

Technical Data	
Max. Output (Nm)	40
SW Max. (mm)	13
Radius (mm)	13
Height (mm)	16

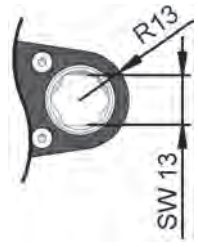

Gear Socket type & Dimension		
(HEX)	≦ 1/2 inch	≦ 13 mm

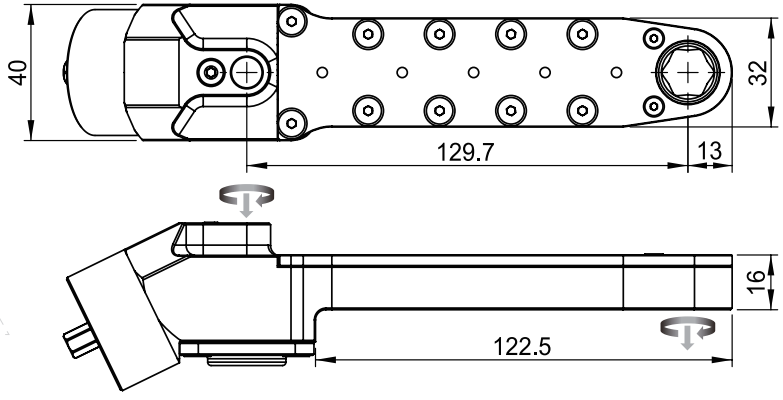

	GAC-16-1-1
Maximum Input (Nm)	35
Max. Output (Nm)	40
Efficiency Factor (η)	0.53
Gear Stages	6
Gear Ratio (i)	2.15

Du-Pas®

SPECIAL-LINE GAC-16-2

Technical Data	
Max. Output (Nm)	40
SW Max. (mm)	14
Radius (mm)	14
Height (mm)	16

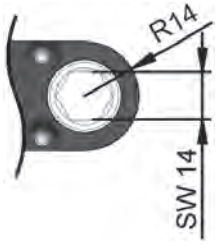

Gear Socket type & Dimension		
(HEX)	≦ 35/64 inch	≦ 14 mm

GAC

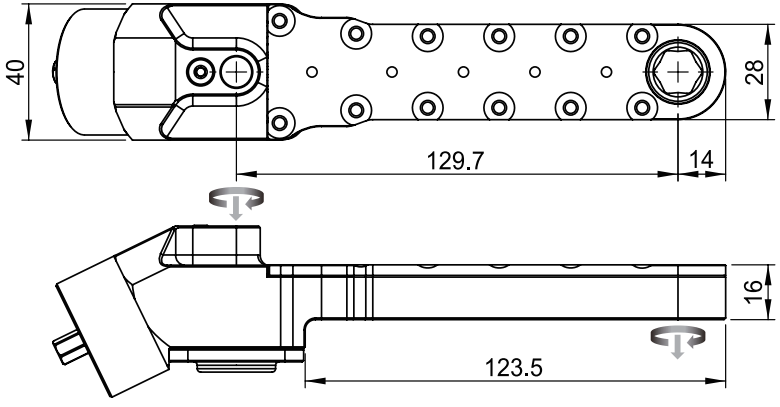

	GAC-16-2-1
Maximum Input (Nm)	35
Max. Output (Nm)	40
Efficiency Factor (η)	0.53
Gear Stages	6
Gear Ratio (i)	2.15

Du-Pas®

SPECIAL-LINE GAC-16-3

GAC

Technical Data	
Max. Output (Nm)	45
SW Max. (mm)	17
Radius (mm)	17
Height (mm)	16

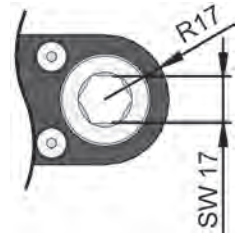

Gear Socket type & Dimension		
(HEX)	≦ 21/32 inch	≦ 17 mm

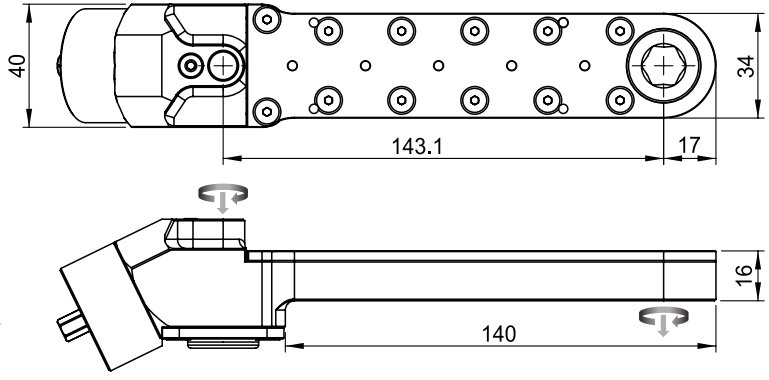

	GAC-16-3-1
Maximum Input (Nm)	36
Max. Output (Nm)	45
Efficiency Factor (η)	0.53
Gear Stages	6
Gear Ratio (i)	2.39

Du-Pas®

SPECIAL-LINE GAC-16-4

Technical Data	
Max. Output (Nm)	45
SW Max. (mm)	24
Radius (mm)	20
Height (mm)	16

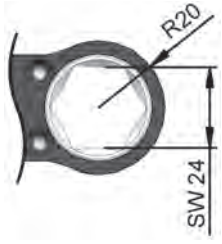

Gear Socket type & Dimension		
(HEX)	≦ 15/16 inch	≦ 24 mm

GAC

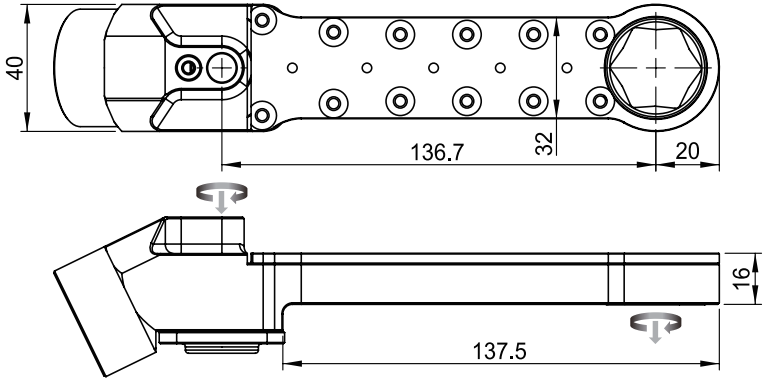

	GAC-16-4-1
Maximum Input (Nm)	24
Max. Output (Nm)	45
Efficiency Factor (η)	0.53
Gear Stages	6
Gear Ratio (i)	3.59

Du-Pas®

SPECIAL-LINE GAC-18-1

GAC

Technical Data	
Max. Output (Nm)	50
SW Max. (mm)	14
Radius (mm)	14
Height (mm)	18

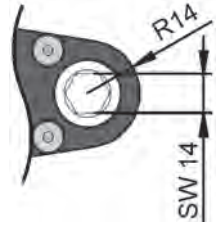

Gear Socket type & Dimension		
(HEX)	≦ 35/64 inch	≦ 14 mm

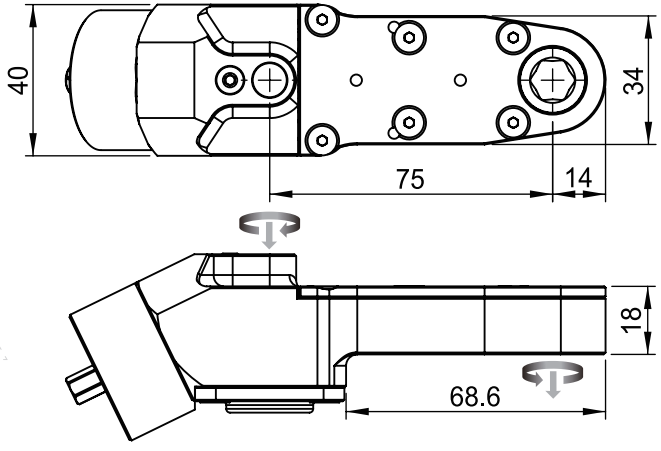

	GAC-18-1-1
Maximum Input (Nm)	31
Max. Output (Nm)	50
Efficiency Factor (η)	0.73
Gear Stages	3
Gear Ratio (i)	2.24

Du-Pas®

SPECIAL-LINE GAC-18-1

Technical Data	
Max. Output (Nm)	50
SW Max. (mm)	14
Radius (mm)	14
Height (mm)	18

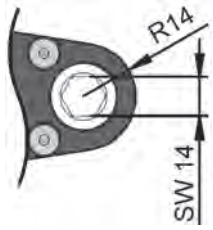

Gear Socket type & Dimension		
(HEX)	≦ 35/64 inch	≦ 14 mm

GAC

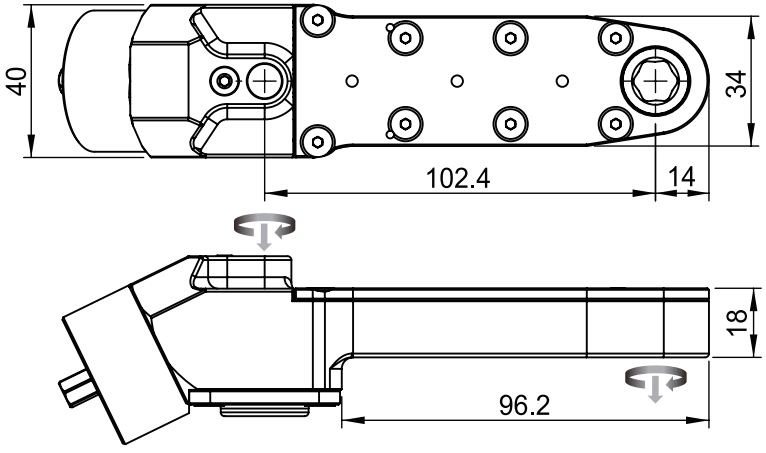

	GAC-18-1-2
Maximum Input (Nm)	34
Max. Output (Nm)	50
Efficiency Factor (η)	0.66
Gear Stages	4
Gear Ratio (i)	2.24

Du-Pas®

SPECIAL-LINE GAC-18-1

GAC

Technical Data	
Max. Output (Nm)	50
SW Max. (mm)	14
Radius (mm)	14
Height (mm)	18

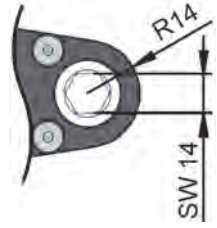

Gear Socket type & Dimension		
(HEX)	≦ 35/64 inch	≦ 14 mm

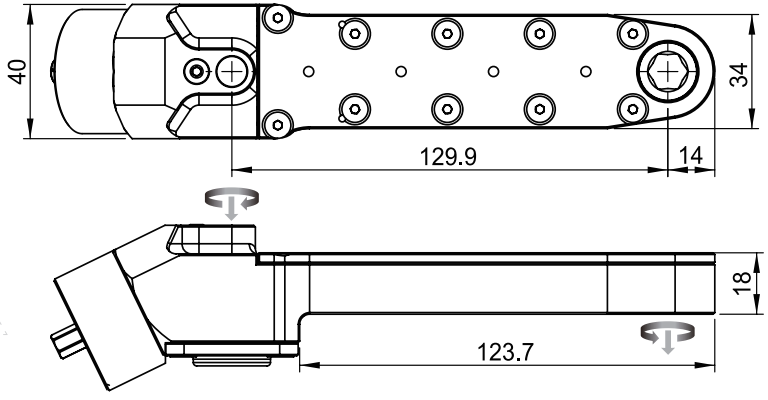

	GAC-18-1-3
Maximum Input (Nm)	38
Max. Output (Nm)	50
Efficiency Factor (η)	0.59
Gear Stages	5
Gear Ratio (i)	2.24

Du-Pas®

SPECIAL-LINE GAC-18-2

Technical Data	
Max. Output (Nm)	50
SW Max. (mm)	14
Radius (mm)	14
Height (mm)	18

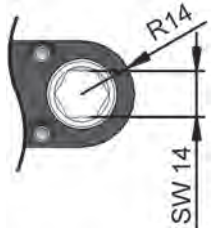

Gear Socket type & Dimension		
(HEX)	≦ 35/64 inch	≦ 14 mm

GAC

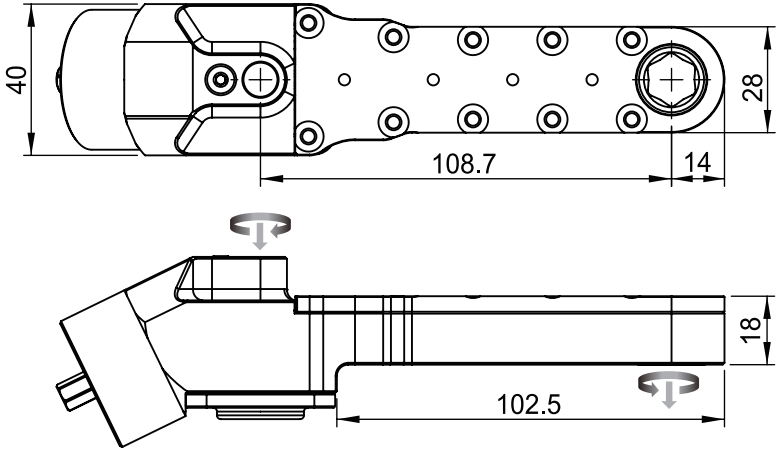

	GAC-18-2-1
Maximum Input (Nm)	40
Max. Output (Nm)	50
Efficiency Factor (η)	0.59
Gear Stages	5
Gear Ratio (i)	2.15

Du-Pas®

SPECIAL-LINE GAC-21-1

GAC

Technical Data	
Max. Output (Nm)	70
SW Max. (mm)	18
Radius (mm)	18
Height (mm)	20.6

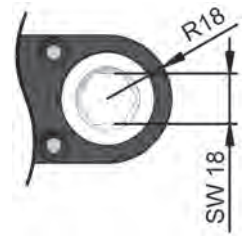

Gear Socket type & Dimension		
(HEX)	≦ 45/64 inch	≦ 18 mm

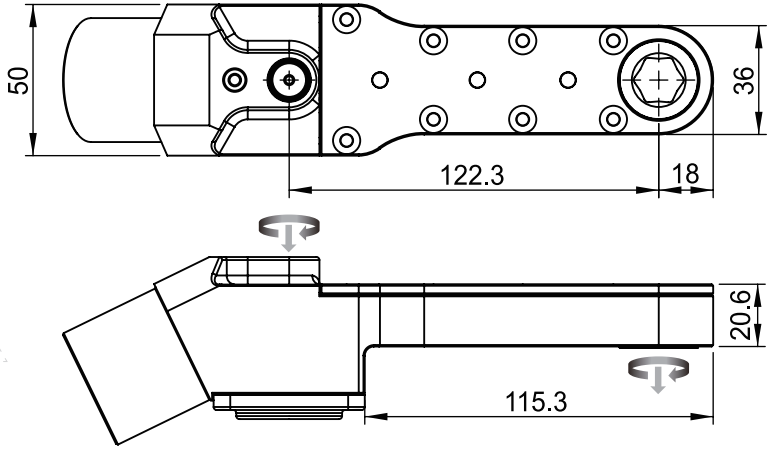

	GAC-21-1-1
Maximum Input (Nm)	47
Max. Output (Nm)	70
Efficiency Factor (η)	0.66
Gear Stages	4
Gear Ratio (i)	2.25

SPECIAL-LINE

GBC - 90° close type

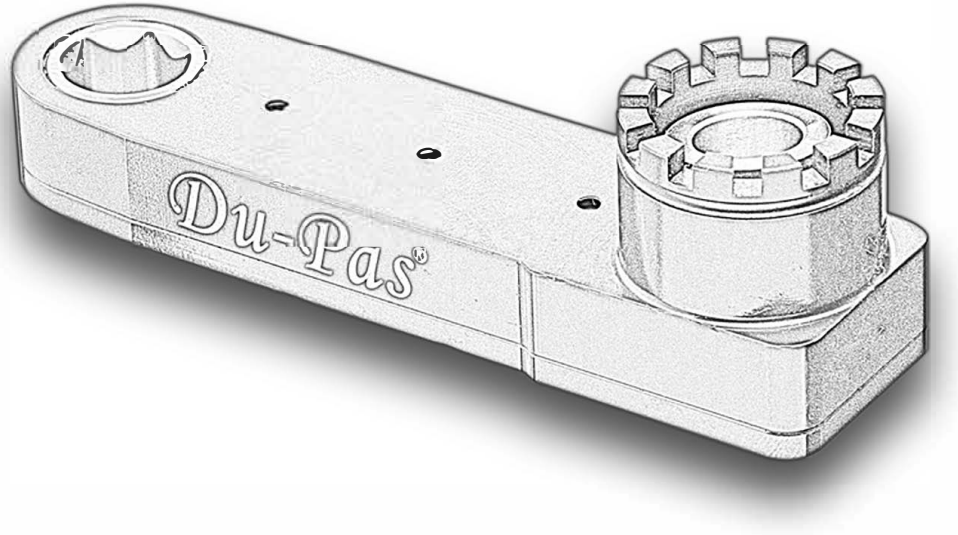

Du-Pas®

SPECIAL-LINE GBC-14-1

Technical Data	
Max. Output (Nm)	15
SW Max. (mm)	9
Radius (mm)	9
Height (mm)	14

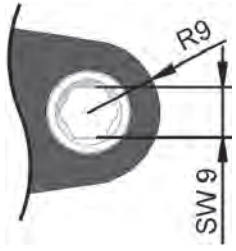

Gear Socket type & Dimension		
(HEX)	≦ 11/32 inch	≦ 9 mm

GBC

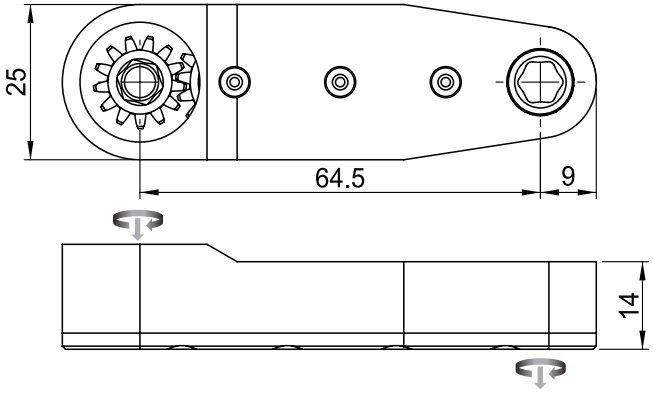

	GBC-14-1-1
Maximum Input (Nm)	23
Max. Output (Nm)	15
Efficiency Factor (η)	0.66
Gear Stages	4
Gear Ratio (i)	1

Du-Pas®

SPECIAL-LINE GBC-14-2

Technical Data	
Max. Output (Nm)	20
SW Max. (mm)	10
Radius (mm)	10.5
Height (mm)	14

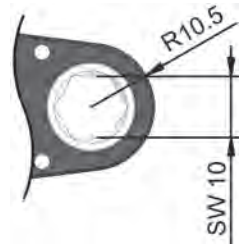

Gear Socket type & Dimension		
(HEX)	≦ 25/64 inch	≦ 10 mm

GBC

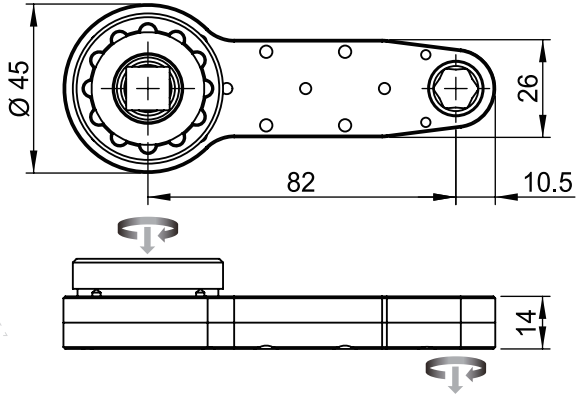

	GBC-14-2-1
Maximum Input (Nm)	37
Max. Output (Nm)	20
Efficiency Factor (η)	0.66
Gear Stages	4
Gear Ratio (i)	0.81

Du-Pas®

SPECIAL-LINE GBC-14-3

Technical Data	
Max. Output (Nm)	35
SW Max. (mm)	13
Radius (mm)	13
Height (mm)	14

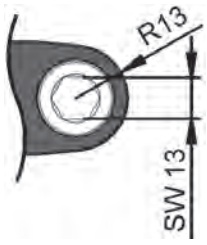

Gear Socket type & Dimension		
(HEX)	≦ 1/2 inch	≦ 13 mm

GBC

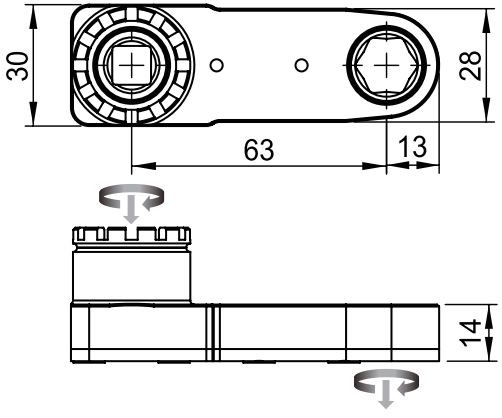

	GBC-14-3-1
Maximum Input (Nm)	48
Max. Output (Nm)	35
Efficiency Factor (η)	0.73
Gear Stages	3
Gear Ratio (i)	1

Du-Pas®

SPECIAL-LINE GBC-14-3

Technical Data	
Max. Output (Nm)	35
SW Max. (mm)	13
Radius (mm)	13
Height (mm)	14

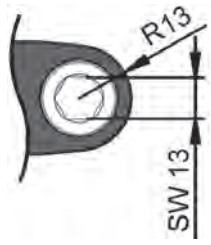

Gear Socket type & Dimension		
(HEX)	≦ 1/2 inch	≦ 13 mm

GBC

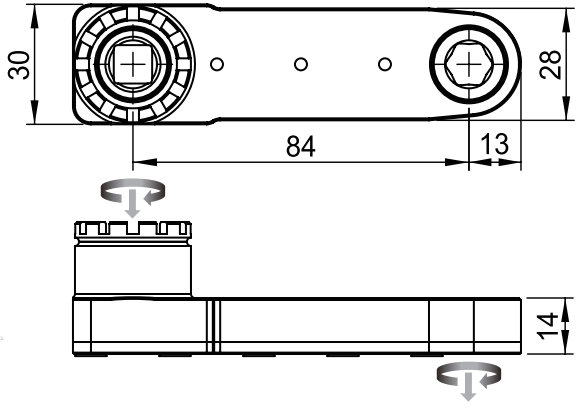

	GBC-14-3-2
Maximum Input (Nm)	53
Max. Output (Nm)	35
Efficiency Factor (η)	0.66
Gear Stages	4
Gear Ratio (i)	1

Du-Pas®

SPECIAL-LINE GBC-14-4

Technical Data	
Max. Output (Nm)	35
SW Max. (mm)	13
Radius (mm)	13
Height (mm)	14

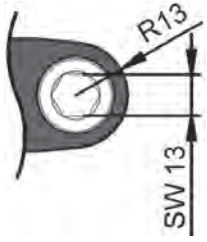

Gear Socket type & Dimension		
(HEX)	≦ 1/2 inch	≦ 13 mm

GBC

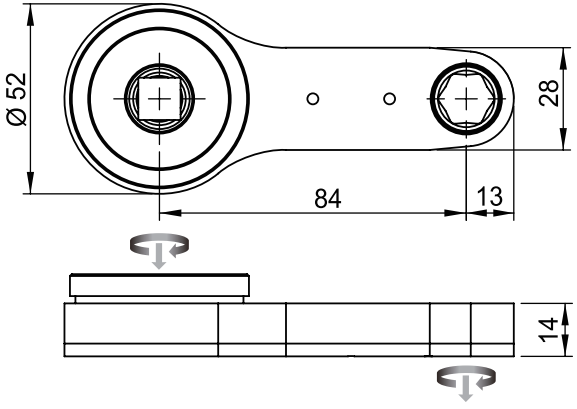

	GBC-14-4-1
Maximum Input (Nm)	53
Max. Output (Nm)	35
Efficiency Factor (η)	0.66
Gear Stages	4
Gear Ratio (i)	1

Du-Pas®

SPECIAL-LINE GBC-14-5

Technical Data	
Max. Output (Nm)	35
SW Max. (mm)	13
Radius (mm)	13
Height (mm)	14

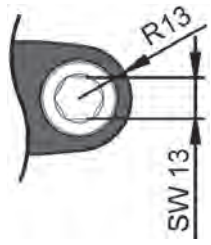

Gear Socket type & Dimension		
(HEX)	≦ 1/2 inch	≦ 13 mm

GBC

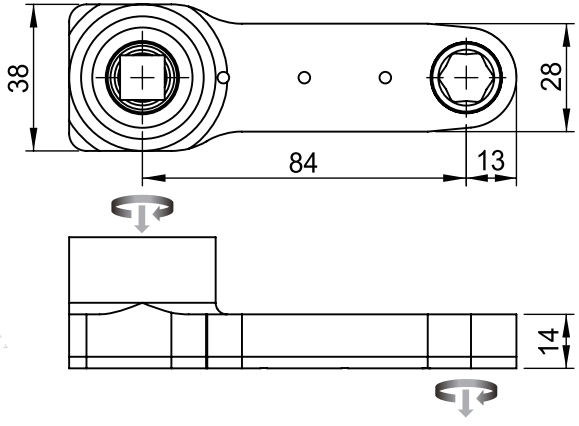

	GBC-14-5-1
Maximum Input (Nm)	53
Max. Output (Nm)	35
Efficiency Factor (η)	0.66
Gear Stages	4
Gear Ratio (i)	1

Du-Pas®

SPECIAL-LINE GBC-14-6

Technical Data	
Max. Output (Nm)	35
SW Max. (mm)	14
Radius (mm)	14
Height (mm)	14.3

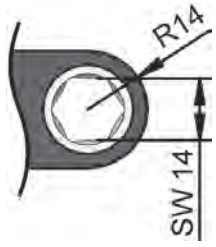

Gear Socket type & Dimension		
(HEX)	≦ 35/64 inch	≦ 14 mm

GBC

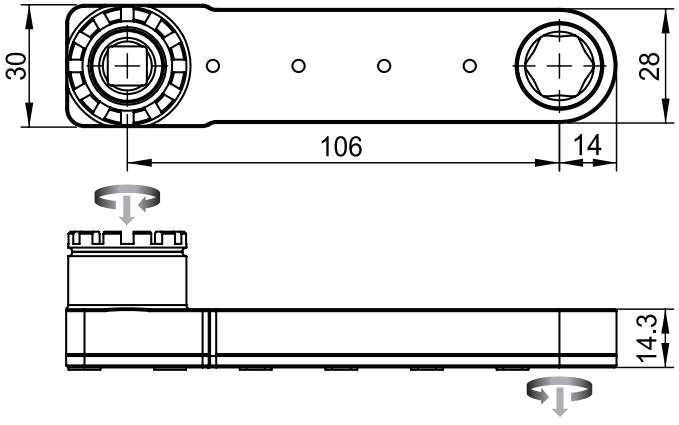

	GBC-14-6-1
Maximum Input (Nm)	54
Max. Output (Nm)	35
Efficiency Factor (η)	0.59
Gear Stages	5
Gear Ratio (i)	1.10

Du-Pas®

SPECIAL-LINE GBC-14-7

Technical Data	
Max. Output (Nm)	35
SW Max. (mm)	13
Radius (mm)	13
Height (mm)	14

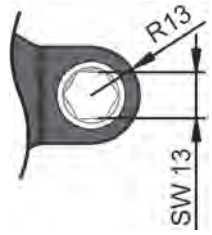

Gear Socket type & Dimension		
(HEX)	≦ 1/2 inch	≦ 13 mm

GBC

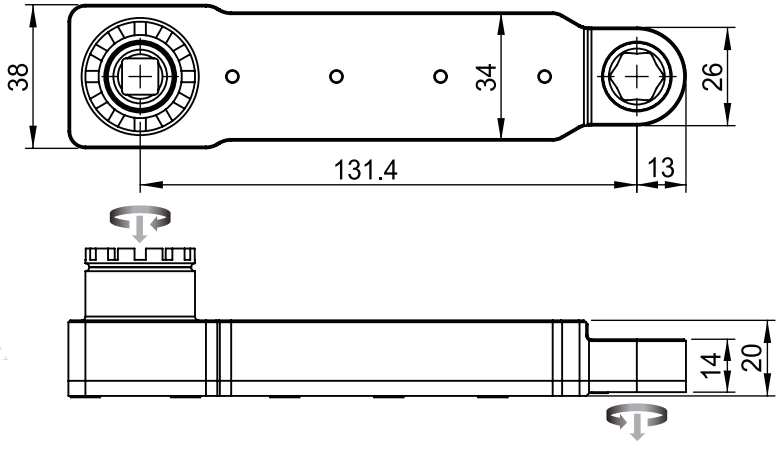

	GBC-14-7-1
Maximum Input (Nm)	59
Max. Output (Nm)	35
Efficiency Factor (η)	0.59
Gear Stages	5
Gear Ratio (i)	1

Du-Pas®

SPECIAL-LINE GBC-14-8

Technical Data	
Max. Output (Nm)	40
SW Max. (mm)	16
Radius (mm)	16.5
Height (mm)	14

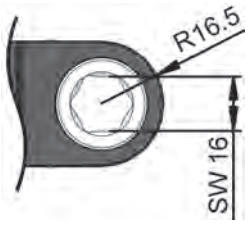

Gear Socket type & Dimension		
(HEX)	≦ 5/8 inch	≦ 16 mm

GBC

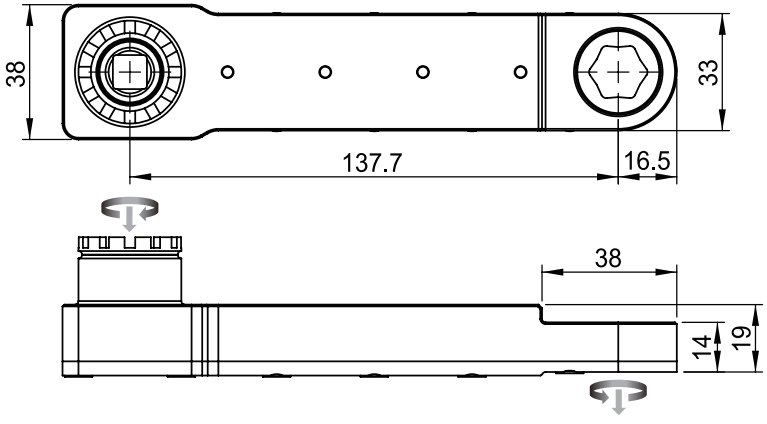

	GBC-14-8-1
Maximum Input (Nm)	68
Max. Output (Nm)	40
Efficiency Factor (η)	0.59
Gear Stages	5
Gear Ratio (i)	1

Du-Pas®

SPECIAL-LINE GBC-16-1

Technical Data	
Max. Output (Nm)	30
SW Max. (mm)	11
Radius (mm)	11
Height (mm)	16

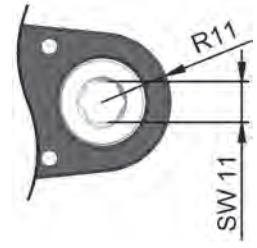

Gear Socket type & Dimension		
(HEX)	≦ 27/64 inch	≦ 11 mm

GBC

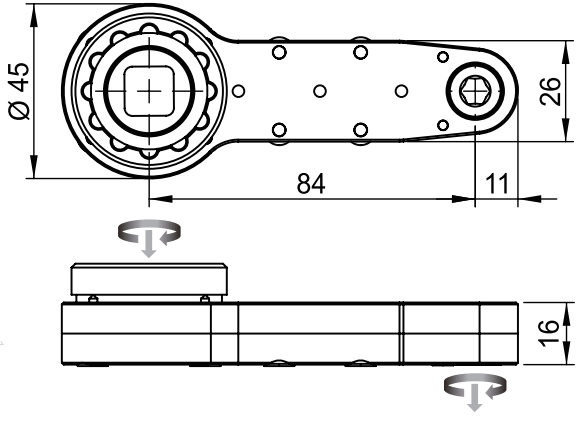

	GBC-16-1-1
Maximum Input (Nm)	67
Max. Output (Nm)	30
Efficiency Factor (η)	0.66
Gear Stages	4
Gear Ratio (i)	0.68

Du-Pas®

SPECIAL-LINE GBC-19-1

Technical Data	
Max. Output (Nm)	45
SW Max. (mm)	16
Radius (mm)	16
Height (mm)	19

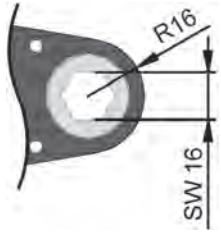

Gear Socket type & Dimension		
(HEX)	≦ 5/8 inch	≦ 16 mm

GBC

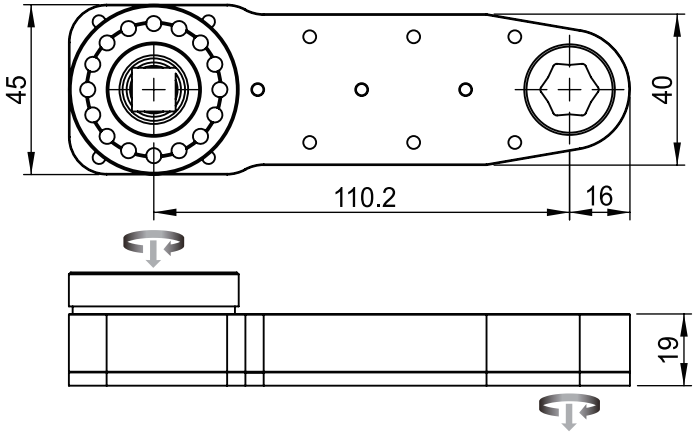

	GBC-19-1-1
Maximum Input (Nm)	68
Max. Output (Nm)	45
Efficiency Factor (η)	0.66
Gear Stages	4
Gear Ratio (i)	1

Du-Pas®

SPECIAL-LINE GBC-20-1

Technical Data	
Max. Output (Nm)	50
SW Max. (mm)	16
Radius (mm)	16.5
Height (mm)	20

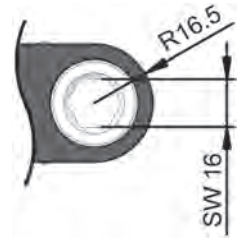

Gear Socket type & Dimension		
(HEX)	≦ 5/8 inch	≦ 16 mm

GBC

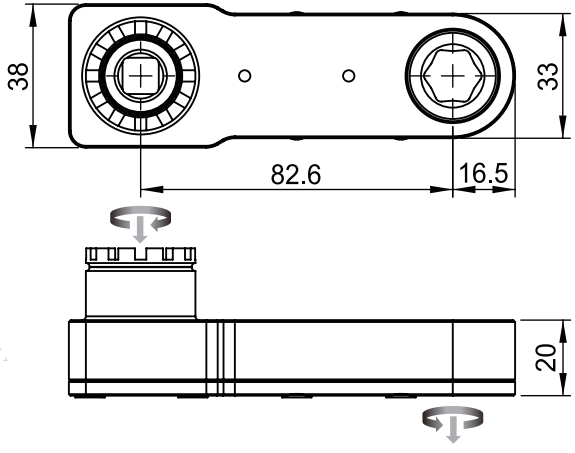

	GBC-20-1-1
Maximum Input (Nm)	68
Max. Output (Nm)	50
Efficiency Factor (η)	0.73
Gear Stages	3
Gear Ratio (i)	1

Du-Pas®

SPECIAL-LINE GBC-20-2

Technical Data	
Max. Output (Nm)	50
SW Max. (mm)	22
Radius (mm)	20
Height (mm)	20

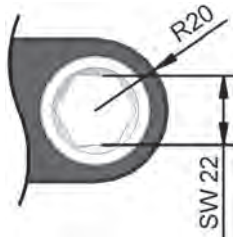

Gear Socket type & Dimension		
(HEX)	≦ 55/64 inch	≦ 22 mm

GBC

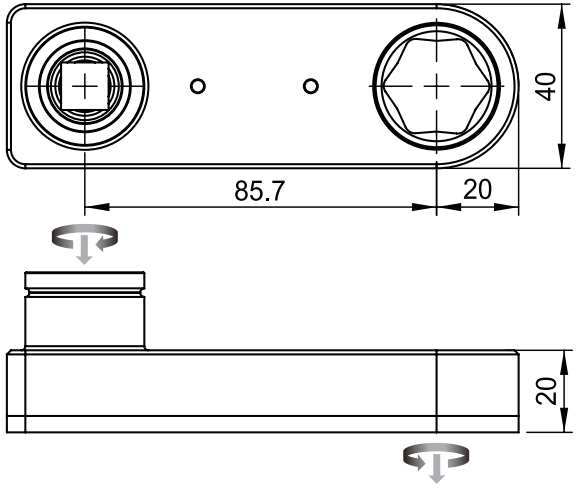

	GBC-20-2-1
Maximum Input (Nm)	56
Max. Output (Nm)	50
Efficiency Factor (η)	0.73
Gear Stages	3
Gear Ratio (i)	1.23

Du-Pas®

SPECIAL-LINE GBC-20-2

Technical Data	
Max. Output (Nm)	50
SW Max. (mm)	22
Radius (mm)	20
Height (mm)	20

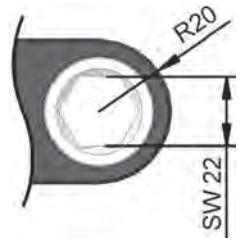

Gear Socket type & Dimension		
(HEX)	≦ 55/64 inch	≦ 22 mm

GBC

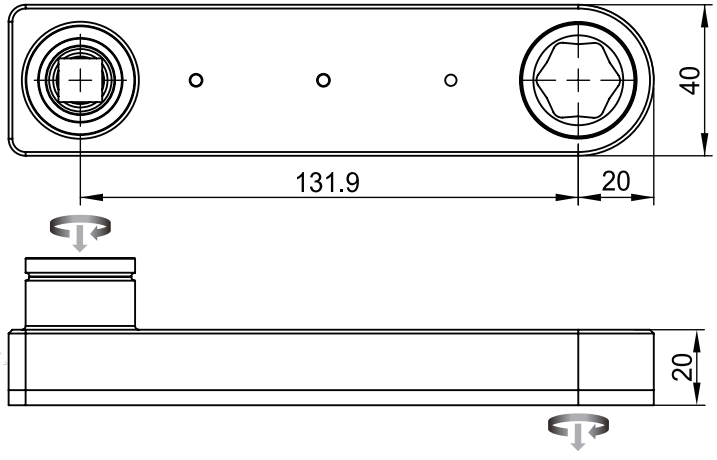

	GBC-20-2-2
Maximum Input (Nm)	62
Max. Output (Nm)	50
Efficiency Factor (η)	0.66
Gear Stages	4
Gear Ratio (i)	1.23

Du-Pas®

SPECIAL-LINE GBC-22-1

Technical Data	
Max. Output (Nm)	50
SW Max. (mm)	16
Radius (mm)	16
Height (mm)	22

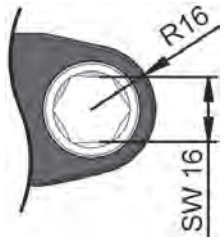

Gear Socket type & Dimension		
(HEX)	≦ 5/8 inch	≦ 16 mm

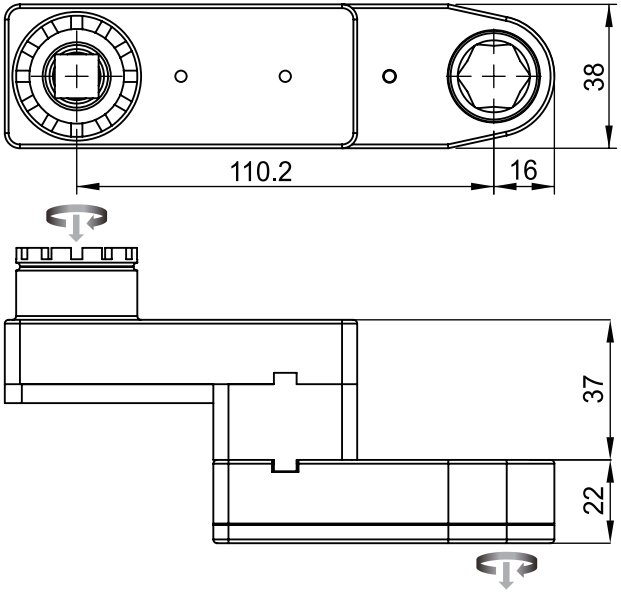

	GBC-22-1-1
Maximum Input (Nm)	76
Max. Output (Nm)	50
Efficiency Factor (η)	0.66
Gear Stages	4
Gear Ratio (i)	1

GBC

Du-Pas®

SPECIAL-LINE GBC-25-1

Technical Data	
Max. Output (Nm)	60
SW Max. (mm)	17
Radius (mm)	16
Height (mm)	25

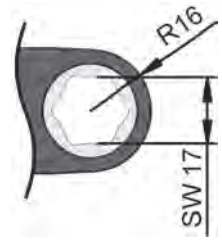

Gear Socket type & Dimension		
(HEX)	≦ 21/32 inch	≦ 17 mm

GBC

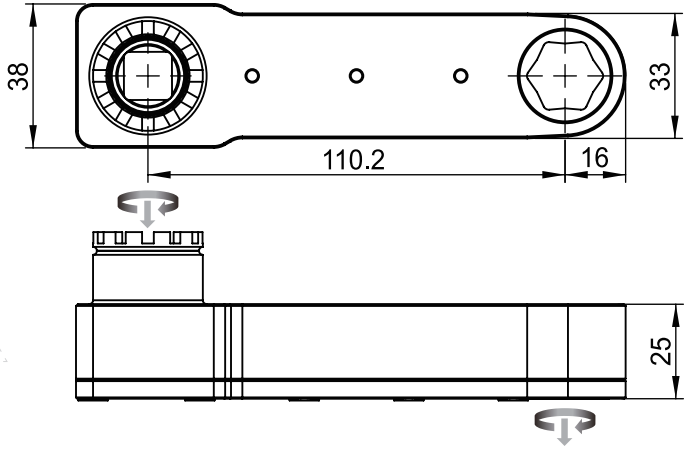

	GBC-25-1-1
Maximum Input (Nm)	91
Max. Output (Nm)	60
Efficiency Factor (η)	0.66
Gear Stages	4
Gear Ratio (i)	1

Du-Pas®

SPECIAL-LINE GBC-30-1

Technical Data	
Max. Output (Nm)	90
SW Max. (mm)	21
Radius (mm)	21
Height (mm)	30

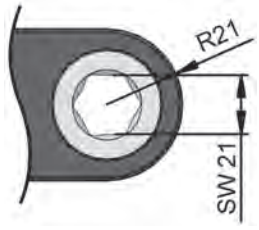

Gear Socket type & Dimension		
(HEX)	≦ 13/16 inch	≦ 21 mm

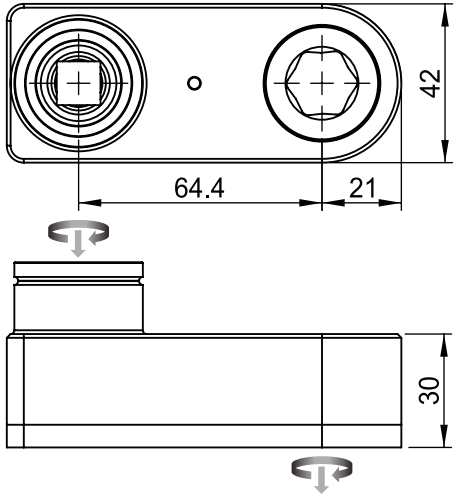

	GBC-30-1-1
Maximum Input (Nm)	90
Max. Output (Nm)	90
Efficiency Factor (η)	0.81
Gear Stages	2
Gear Ratio (i)	1.23

GBC

Du-Pas®

SPECIAL-LINE GBC-30-2

Technical Data	
Max. Output (Nm)	90
SW Max. (mm)	16
Radius (mm)	16
Height (mm)	30

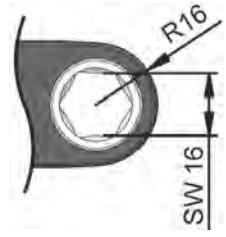

Gear Socket type & Dimension		
(HEX)	≦ 5/8 inch	≦ 16 mm

GBC

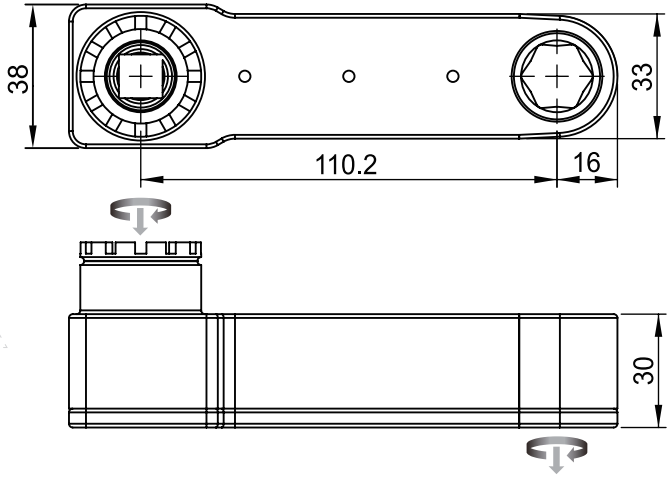

	GBC-30-2-1
Maximum Input (Nm)	136
Max. Output (Nm)	90
Efficiency Factor (η)	0.66
Gear Stages	4
Gear Ratio (i)	1

Du-Pas®

SPECIAL-LINE GBC-30-3

Technical Data	
Max. Output (Nm)	100
SW Max. (mm)	25
Radius (mm)	25
Height (mm)	30

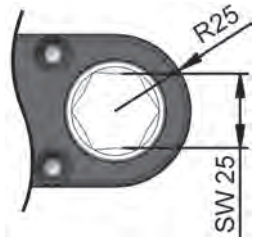

Gear Socket type & Dimension		
(HEX)	≦ 31/32 inch	≦ 25 mm

GBC

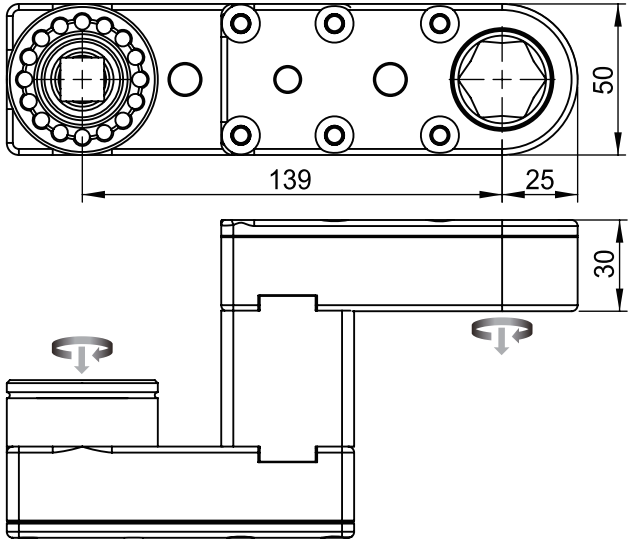

	GBC-30-3-1
Maximum Input (Nm)	128
Max. Output (Nm)	100
Efficiency Factor (η)	0.66
Gear Stages	4
Gear Ratio (i)	1.18

Du-Pas®

SPECIAL-LINE GBC-32-1

Technical Data	
Max. Output (Nm)	100
SW Max. (mm)	19
Radius (mm)	19
Height (mm)	31.8

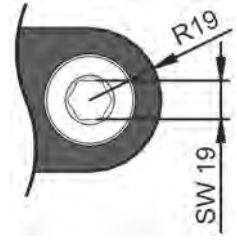

Gear Socket type & Dimension		
(HEX)	≦ 47/64 inch	≦ 19 mm

GBC

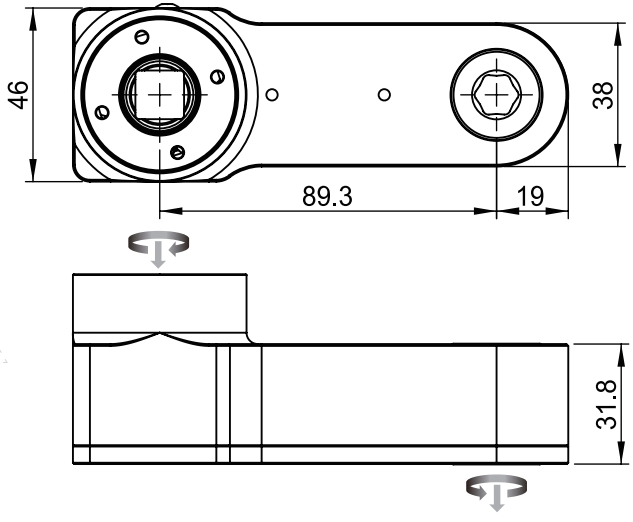

	GBC-32-1-1
Maximum Input (Nm)	137
Max. Output (Nm)	100
Efficiency Factor (η)	0.73
Gear Stages	3
Gear Ratio (i)	1

Du-Pas®

SPECIAL-LINE GBC-34-1

Technical Data	
Max. Output (Nm)	200
SW Max. (mm)	27
Radius (mm)	27
Height (mm)	34

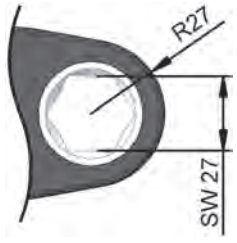

Gear Socket type & Dimension		
(HEX)	≦ 1-1/16 inch	≦ 27 mm

GBC

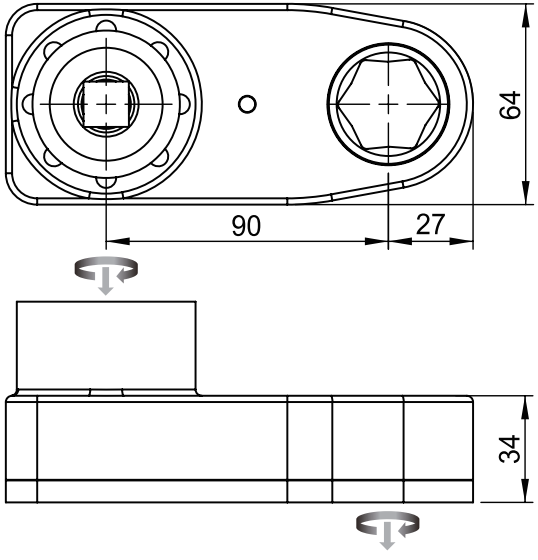

	GBC-34-1-1
Maximum Input (Nm)	247
Max. Output (Nm)	200
Efficiency Factor (η)	0.81
Gear Stages	2
Gear Ratio (i)	1

MULTI-LINE

HOLD & DRIVE

Du-Pas®

HOLD & DRIVE HD-525-1

Technical Data		Male Hex	Female Hex
Max. Output (Nm)	125	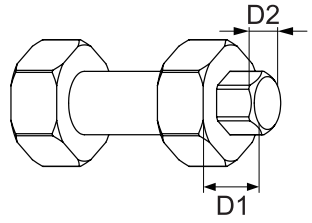	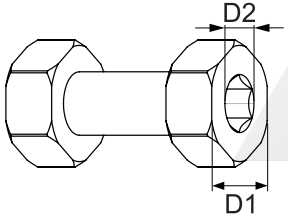
Height (mm)	58.6		
Max. OD (mm)	ø52.5		

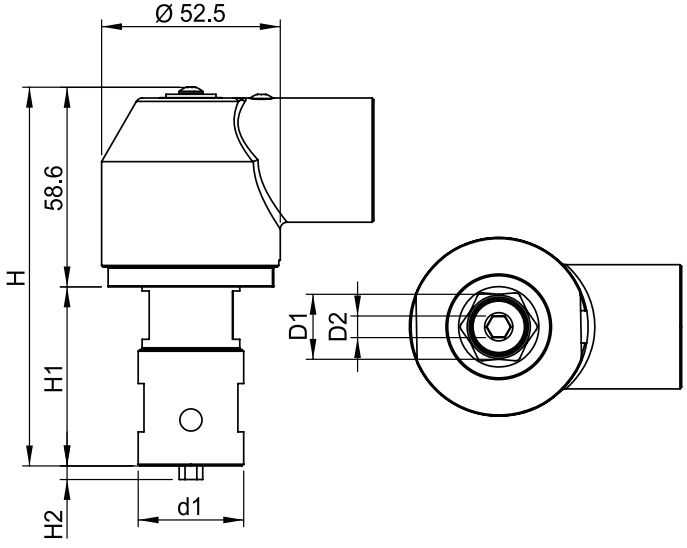

	HD-525-1- #
Maximum Input (Nm)	58
Max. Output (Nm)	125
Efficiency Factor (η)	0.9
Gear Ratio (i)	2.38

HD

APPENDIX

Du-Pas Tools references

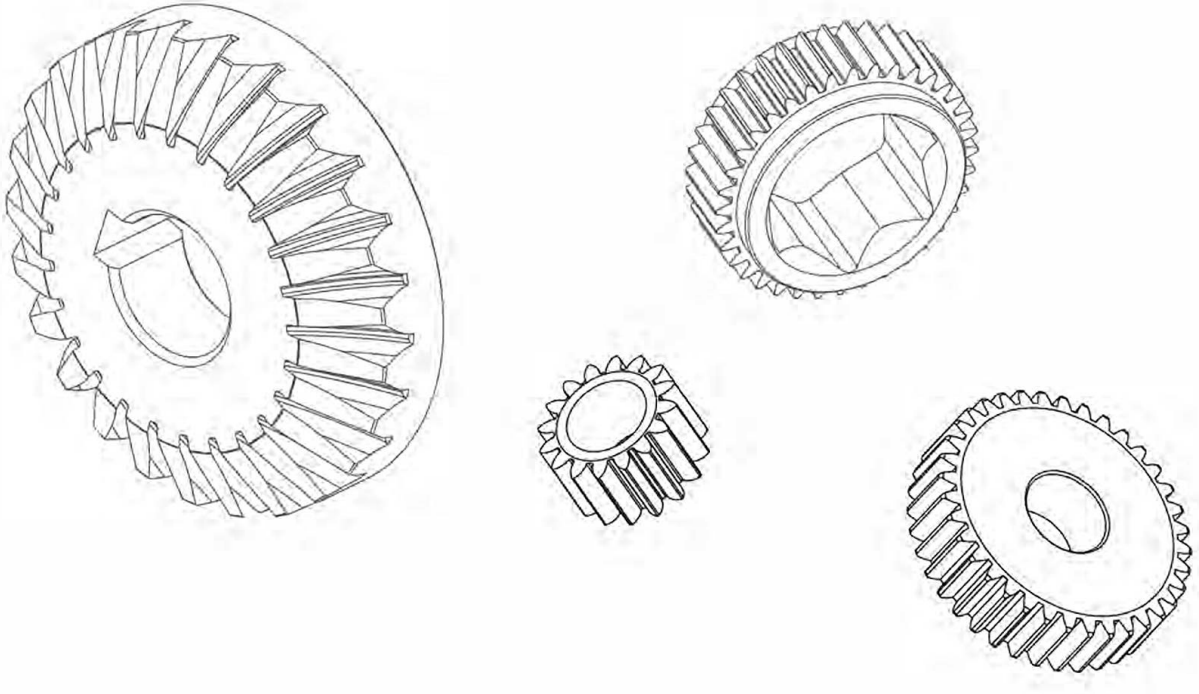

APPENDIX : BC-90° CLOSE TYPE

Part	Max. Input (Nm)	Max. Output (Nm)	Efficiency Factor (η)	Gear Stages	Gear Ratio (i)	Du-Pas Tools		
						Model No.	Torque(Nm)	Speed (rpm)
BC-10-1-1	15	13	0.73	3	1.22	WRTA-30	8-18	400
BC-10-2-1	15	8	0.66	4	0.90	WRTA-10		
BC-12-1-1	15	7	0.66	4	0.76	WRTCA-07		
BC-14-1-1	20	7	0.66	4	0.58	WRTBA-16		
BC-15-1-1	50	33	0.66	4	1	WRTA-35		
BC-16-1-1	20	16	0.81	2	1	WRTCA-14		
BC-16-2-1	20	13	0.81	2	0.82	WRTBA-10		
BC-16-3-1	35	28	0.81	2	1	WRTA-16		
						WRTA-35		
						WRTBA-10		
						WRTBA-30	8-18	450
						WRTBA-35	10-24	350
BC-16-3-2	40	29	0.73	3	1	WRTA-35		
BC-16-4-1	40	36	0.73	3	1.29			
BC-16-4-2	50	36	0.73	3	1	WRTBA-35	10-21	350
BC-16-5-1	40	21	0.66	4	0.82			
BC-16-6-1	40	21	0.66	4	0.81			
BC-16-7-1	50	33	0.66	4	1	WRTA-35	10-22	330
BC-16-8-1	50	25	0.66	4	0.77			
BC-16-8-2	50	20	0.53	6	0.77	WRTA-50	10-20	260
						WRTBA-10	1.5-6	1000
BC-18-1-1	50	33	0.66	4	1	WRTA-50		
BC-18-2-1	60	48	0.81	2	1	WRTA-60	25-48	160
						WRTBA-50	10-40	200
BC-20-1-1	60	41	0.81	2	0.86	WRTA-50		
BC-20-2-1	70	56	0.81	2	1	WRTBA-70		
BC-20-3-1	70	56	0.81	2	1	WRTA-70		
BC-20-4-1	70	46	0.66	4	1	WRTBA-70		
BC-22-1-1	90	65	0.73	3	1	WRTBA-70	20-55	170
						WRTBA-90	40-65	90
BC-24-1-1	100	66	0.66	4	1			
BC-30-1-1	120	79	0.66	4	1			
BC-34-1-1	250	165	0.66	4	1			
BC-35-1-1	150	71	0.66	4	0.72			

APPENDIX : BO-90° OPEN TYPE

Part	Max. Input (Nm)	Max. Output (Nm)	Efficiency Factor (η)	Gear Stages	Gear Ratio (i)	Du-Pas Tools		
						Model No.	Torque(Nm)	Speed (rpm)
BO-10-1-1	20	16	0.81	2	1	WRTBA-16	5-13	600
BO-12-1-1	25	16	0.65	4	1			
BO-14-1-1	30	19	0.66	4	1	WRTCA-30	8-20	200
BO-16-1-1	35	28	0.81	2	1	WRTCA-30	8-24	200
BO-16-2-1	35	28	0.81	2	1	WRTA-35	10-24	330
						WRTCA-30	8-24	70
BO-16-3-1	35	28	0.81	2	1	WRTBA-35	10-24	350
BO-16-4-1	35	28	0.81	2	1	WRTBA-35	10-24	350
BO-16-5-1	35	28	0.81	2	1	WRTA-30	8-17	480
						WRTBA-10	3-8	1000
						WRTBA-16	5-12	600
						WRTBA-30	8-18	450
						WRTBA-35	10-24	350
						WRTCA-30	8-24	200
BO-16-6-1	35	28	0.81	2	1	WRTBA-30	8-17	450
BO-16-7-1	35	28	0.81	2	1	WRTA-16	8-24	70
BO-16-8-1	35	23	0.66	4	1	WRTBA-35	10-20	350
BO-16-9-1	35	23	0.66	4	1			
BO-16-10-1	35	23	0.66	4	1	WRTBA-30	8-15	450
BO-16-11-1	35	23	0.66	4	1	WRTBA-30	8-15	450
						WRTBA-35	10-20	350
BO-16-12-1	70	56	0.81	2	1	WRTBA-70	20-57	170
BO-16-13-1	35	23	0.66	4	1	WRTBA-30	8-20	450
						WRTBA-35	10-20	350
BO-18-1-1	60	48	0.81	2	1	WRTBA-50	10-40	200
						WRTBA-60	25-49	160
BO-23-1-1	70	56	0.81	2	1	WRTA-70	20-60	170
						WRTBA-70	20-57	170

APPENDIX : IC-0° CLOSE TYPE

Part	Max. Input (Nm)	Max. Output (Nm)	Efficiency Factor (η)	Gear Stages	Gear Ratio (i)	Du-Pas Tools		
						Model No.	Torque(Nm)	Speed (rpm)
IC-10-1-1	13	15	0.53	6	2.24	WRTCA-14	5-11	320
IC-10-2-1	9	20	0.66	4	3.43	TDI-40S	-	-
IC-11-1-1	12	25	0.66	4	3.09	WRTA-16	7-23	270
IC-12-1-1	18	25	0.66	4	2.13			
IC-12-2-1	18	25	0.66	4	2.15	TDI-40S	-	-
IC-13-1-1	16	20	0.48	7	2.67			
IC-14-1-1	22	35	0.73	3	2.15	TDI-40S	-	-
IC-14-1-2	25	35	0.66	4	2.15	TDI-60S	-	-
						TDI-70S	-	-
						WRTA-35	14-31	250
						WRTBA-35	10-30	220
IC-14-2-1	22	35	0.73	3	2.15	TDI-40S	-	-
IC-14-3-1	28	25	0.59	5	1.54	TDI-50S	-	-
IC-14-4-1	29	35	0.66	4	1.85	TDI-60S	-	-
IC-14-4-2	32	35	0.59	5	1.85	WRTBA-16	5-12	450
						TDI-40S	-	-
						TDI-50S		
						TDI-60S	-	-
IC-14-5-1	32	35	0.59	5	1.85	TDI-60S	-	-
IC-14-6-1	25	35	0.66	4	2.15	WRTA-30	8-22	310
IC-14-6-2	28	35	0.59	5	2.15	TDI-60S	-	-
						TDI-70S	-	-
						WRTA-35	14-31	250
IC-14-6-3	31	35	0.53	6	2.15	TDI-60S	-	-
						TDI-60X	-	-
						TDI-70S	-	-
IC-14-7-1	25	35	0.59	5	2.36	TDI-70S	-	-
IC-14-7-2	28	35	0.53	6	2.36	TDI-60S	-	-
IC-14-8-1	36	35	0.53	6	1.85	TDI-60S	-	-
IC-16-1-1	31	35	0.59	5	1.92	WRTBA-35	10-28	180
IC-16-2-1	28	35	0.59	5	2.15	TDI-70S	-	-
IC-16-3-1	32	40	0.59	5	2.15	TDI-60S	-	-
						TDI-70S	-	-
						TDI-80S	-	-

APPENDIX : IC-0° CLOSE TYPE

Part	Max. Input (Nm)	Max. Output (Nm)	Efficiency Factor (η)	Gear Stages	Gear Ratio (i)	Du-Pas Tools		
						Model No.	Torque(Nm)	Speed (rpm)
IC-16-3-2	29	40	0.59	5	2.36	TDI-70S	-	-
IC-16-3-3	35	40	0.53	6	2.15	TDI-80S	-	-
IC-16-4-1	18	45	0.66	4	3.83	TDI-50S	-	-
						WRTA-16	9-28	210
IC-16-5-1	25	40	0.73	3	2.17			
IC-16-5-2	29	40	0.66	4	2.09	WRTA-30	11-23	300
						WRTBA-10		
						WRTBA-16	8-17	380
						WRTBA-30	11-23	300
						WRTBA-35	14-31	220
						WRTCA-14	3.5-14	320
						TDI-70S	-	-
IC-16-5-3	35	40	0.53	6	2.15	TDI-70X	-	-
IC-16-6-1	26	40	0.66	4	2.30	WRTA-35	11-32	200
IC-16-6-2	43	40	0.53	6	1.74	TDI-65	-	-
						TDI-70S	-	-
IC-18-1-1	29	50	0.73	3	2.37	TDI-80S	-	-
IC-18-1-2	34	45	0.59	5	2.24	TDI-80S	-	-
IC-18-2-1	27	40	0.66	4	2.24	TDI-70S	-	-
IC-18-3-1	26	50	0.66	4	2.90	TDI-80S	-	-
IC-18-4-1	39	50	0.59	5	2.15	TDI-70S	-	-
						TDI-70X	-	-
						TDI-80S	-	-
IC-18-4-2	36	50	0.59	5	2.36	TDI-80S	-	-
IC-18-4-3	44	50	0.53	6	2.15	TDI-80S	-	-
IC-20-1-1	35	60	0.73	3	2.37	TDI-80S	-	-
IC-20-1-2	45	60	0.59	5	2.24	TDI-80S	-	-
IC-20-2-1	28	60	0.73	3	2.90	TDI-80	-	-
IC-20-2-2	31	60	0.66	4	2.90	TDI-80S	-	-
IC-20-2-3	35	60	0.59	5	2.90	TDI-65	-	-
						TDI-70S	-	-
						TDI-80	-	-
						TDI-80S	-	-
IC-20-3-1	27	60	0.66	4	3.43	TDI-60S	-	-

APPENDIX : IC-0° CLOSE TYPE

Part	Max. Input (Nm)	Max. Output (Nm)	Efficiency Factor (η)	Gear Stages	Gear Ratio (i)	Du-Pas Tools		
						Model No.	Torque(Nm)	Speed (rpm)
IC-20-4-1	33	65	0.59	5	3.30	TDI-80S	-	-
IC-21-1-1	36	65	0.81	2	2.26	TDI-80S	-	-
IC-21-1-2	44	65	0.66	4	2.26	WRTA-60	30-60	100
						WRTBA-50	11-53	120
						WRTBA-90	43-96	56
IC-21-1-3	54	65	0.53	6	2.26	WRTBA-50	9-43	120
IC-25-1-1	63	80	0.66	4	1.92	TDI-100	-	-
IC-25-2-1	69	70	0.53	6	1.92	WRTBA-70	15-50	120

APPENDIX : IO-0° OPEN TYPE

Part	Max. Input (Nm)	Max. Output (Nm)	Efficiency Factor (η)	Gear Stages	Gear Ratio (i)	Du-Pas Tools		
						Model No.	Torque(Nm)	Speed (rpm)
IO-14-1-1	20	40	0.66	4	3.07	WRTBA-30	12-32	200
IO-16-1-1	25	56	0.66	4	3.45	WRTBA-30	13-36	180
IO-16-2-1	25	50	0.66	4	3.07	WRTBA-10	7-13	420
						WRTBA-16	8-23	270
						WRTBA-35	15-43	160
IO-16-3-1	25	50	0.66	4	3.07	WRTA-16	8-23	270
						WRTA-35	15-43	150
						WRTBA-10	7-13	420
						WRTBA-16	8-23	270
						WRTBA-30	13-28	200
						WRTBA-35	15-43	160
IO-16-4-1	25	56	0.66	4	3.45	WRTBA-10	5-16	400
						WRTBA-30	15-35	180

APPENDIX : GAC-26° CLOSE TYPE

Part	Max. Input (Nm)	Max. Output (Nm)	Efficiency Factor (η)	Gear Stages	Gear Ratio (i)	Du-Pas Tools		
						Model No.	Torque(Nm)	Speed (rpm)
GAC-14-1-1	24	30	0.59	5	2.15	TDI-60S	-	-
						TDI-70S	-	-
GAC-14-2-1	32	35	0.53	6	2.05	TDI-60S	-	-
						TDI-70S	-	-
GAC-14-3-1	28	35	0.59	5	2.15	TDI-60	-	-
GAC-14-3-2	31	35	0.53	6	2.15	TDI-40S	-	-
						TDI-50S	-	-
						TDI-60S	-	-
						TDI-60X	-	-
						TDI-70S	-	-
						PW-15	8-13	1900
						PW-45	23-32	1700
						WRTA-35	10-28	210
GAC-14-4-1	30	25	0.39	9	2.15	TDI-60S	-	-
						TDI-70S	-	-
GAC-16-1-1	35	40	0.53	6	2.15	TDI-70X	-	-
GAC-16-2-1	35	40	0.53	6	2.15	TDI-80S	-	-
GAC-16-3-1	36	45	0.53	6	2.39	TDI-70S	-	-
						TDI-80S	-	-
GAC-16-4-1	24	45	0.53	6	3.59	PW-45	38-50	1000
GAC-18-1-1	31	50	0.73	3	2.24	TDI-90	-	-
						TDI-60S	-	-
						TDI-70S	-	-
						TDI-80S	-	-
GAC-18-1-2	34	50	0.66	4	2.24	TDI-90	-	-
						TDI-80S	-	-
GAC-18-1-3	38	50	0.59	5	2.24	TDI-80	-	-
						TDI-80S	-	-
GAC-18-2-1	40	50	0.59	5	2.15	TDI-80S	-	-
GAC-21-1-1	47	70	0.66	4	2.25	WRTBA-70	30-70	100

APPENDIX : GBC-90° CLOSE TYPE

Part	Max. Input (Nm)	Max. Output (Nm)	Efficiency Factor (η)	Gear Stages	Gear Ratio (i)	Du-Pas Tools		
						Model No.	Torque(Nm)	Speed (rpm)
GBC-14-1-1	23	15	0.66	4	1	TDBS-J60-160-J	-	-
GBC-14-2-1	37	20	0.66	4	0.81	TDI-50R	-	-
GBC-14-3-1	48	35	0.73	3	1	TDI-70X	-	-
GBC-14-3-2	53	35	0.66	4	1	TDI-40	-	-
						TDI-70X	-	-
GBC-14-4-1	53	35	0.66	4	1	TDI-70RG	-	-
GBC-14-5-1	53	35	0.66	4	1	TDI-65	-	-
						TDI-70X	-	-
GBC-14-6-1	54	35	0.59	5	1.1	TDI-70S	-	-
GBC-14-7-1	59	35	0.59	5	1	TDI-70X	-	-
GBC-14-8-1	68	40	0.59	5	1	TDI-70X	-	-
GBC-16-1-1	67	30	0.66	4	0.68	TDI-70RH	-	-
GBC-19-1-1	68	45	0.66	4	1	TDI-70RG	-	-
GBC-20-1-1	68	50	0.73	3	1	TDI-80	-	-
GBC-20-2-1	56	50	0.73	3	1.23	TDI-80	-	-
GBC-20-2-2	62	50	0.66	4	1.23	TDI-80	-	-
GBC-22-1-1	76	50	0.66	4	1	TDI-80	-	-
GBC-25-1-1	91	60	0.66	4	1	TDI-80	-	-
GBC-30-1-1	90	90	0.81	2	1.23	TDI-100	-	-
GBC-30-2-1	136	90	0.66	4	1	TDI-90	-	-
GBC-30-3-1	128	100	0.66	4	1.18	TDI-130	-	-
GBC-32-1-1	137	100	0.73	3	1	TDI-130	-	-
GBC-34-1-1	247	200	0.81	2	1	TDI-180	-	-

APPENDIX : HOLD & DRIVE

Part	Max. Input (Nm)	Max. Output (Nm)	Height (mm)	H (mm)	d1 (mm)	Efficiency Factor (η)	Gear Ratio (i)	Output rotation direction	Du-Pas Tools		
									Model No.	Torque(Nm)	Speed (rpm)
HD-525-1-1	58	125	58.6	112.3	φ31	0.90	2.38	right	TDI-90	85-125	2100-2200
									TDI-80S	70-90	2400-2500
	37	80							TDBS-60SL	50-80	75
	47	100							WRTA-70	50-100	100
									WRTBA-70	50-100	100
HD-525-1-2	58	125	58.6	112.3	φ34	0.90	2.38	right	TDI-90	85-125	2100-2200
HD-525-1-3	58	125	58.6	118.3	φ34	0.90	2.38	right	TDI-90	85-125	2100-2200
HD-525-1-4	47	100	58.6	137.3	φ31	0.90	2.38	right	WRTBA-70	40-80	100
HD-525-1-5	47	100	58.6	124.2	φ35	0.90	2.38	right	WRTBA-70	50-100	100

Customization Available

BC

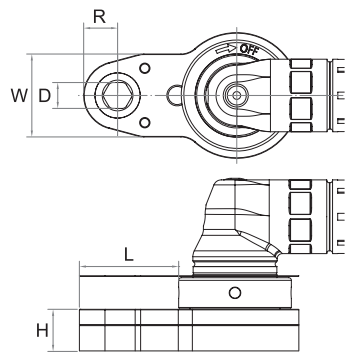

BO

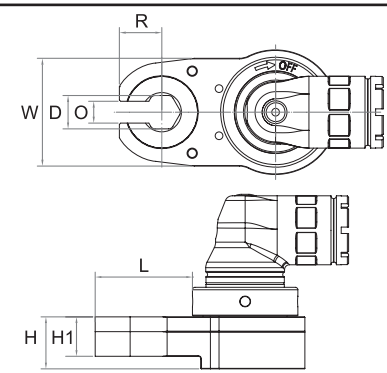

IC

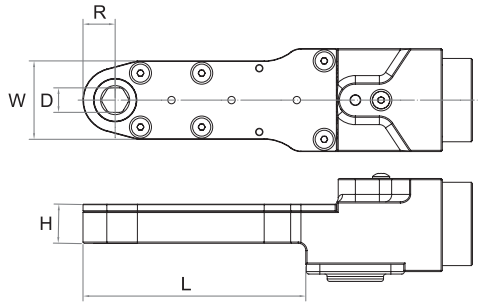

IO

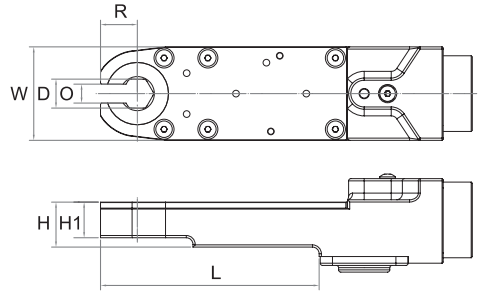

Please fill in the Request Forms for your desired geared head type.

√	Type	Torque Range (Nm)	W (mm)	⬡ D (mm)	O (mm)	R (mm)	L (mm)	H (mm)	H1 (mm)
	BC								
	BO								
	IC								
	IO								

Note: If to purchase gear heads only, dimension drawings of the corresponding part are required to be provided properly to Tranmax.

GAC	GBC
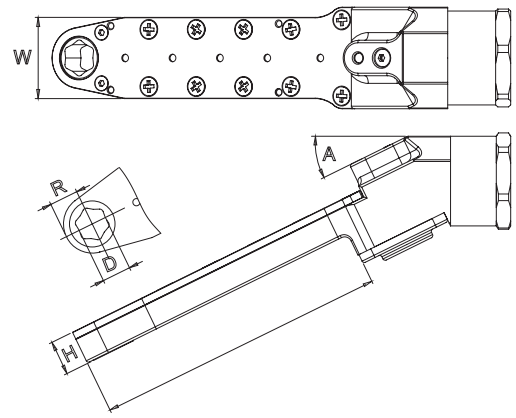	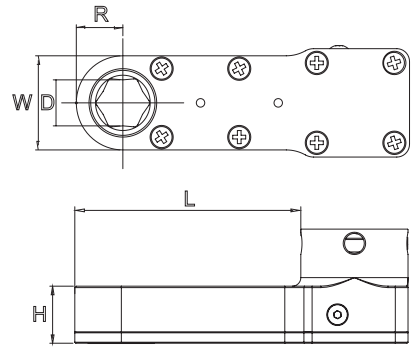

Please fill in the Request Forms for your desired geared head type.

√	Type	Torque Range (Nm)	W (mm)	⬡ D (mm)	R (mm)	H (mm)	L (mm)	A (Angle)
	GAC							26°
	GBC							90°

Please fill in the Request Forms for your desired geared head type.

Type	Torque Range (Nm)	H (mm)	H1 (mm)	H2 (mm)
HD				
		D1 (mm)	D2 (mm)	

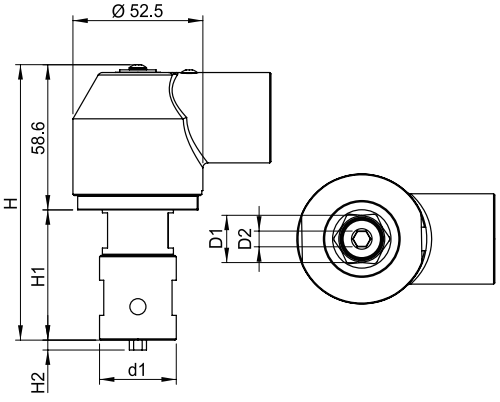

Note: If to purchase gear heads only, dimension drawings of the corresponding part are required to be provided properly to Tranmax.

NOTE

Du-Pas®

INDUSTRIAL POWER TOOLS

TRANMAX started to develop the assembly line tools in 2005. Du-Pas is the brand we use for our assembly tools. The idea of “Du-Pas”brand comes from the goal of quality we set for all TRANMAX manufactured products, “Durability Passed”, it also symbolizes Du-Pas are reliable.

TORQTEC™

TORQTEC
100 JEFFREY WAY, STE D
YOUNGSVILLE, NC 27596
919-561-5536

WWW.TORQTEC.NET